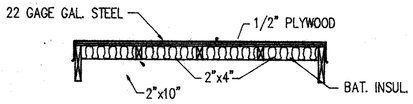

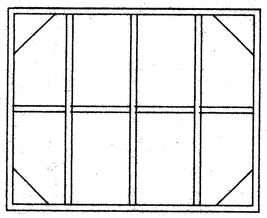

HATCH
SCALE: 1/2"=1'-0"

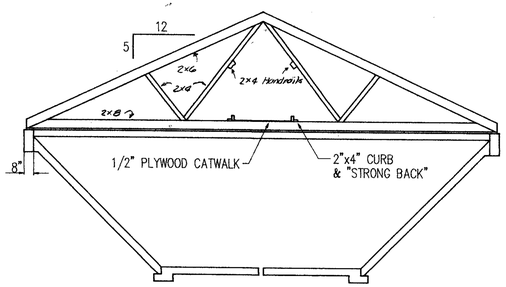

TRANSVERSE SECTION
SCALE: 1"=5'-0"

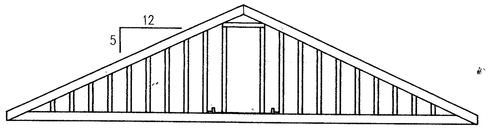

TRUSS DETAIL
SCALE: 1"=5'-0"

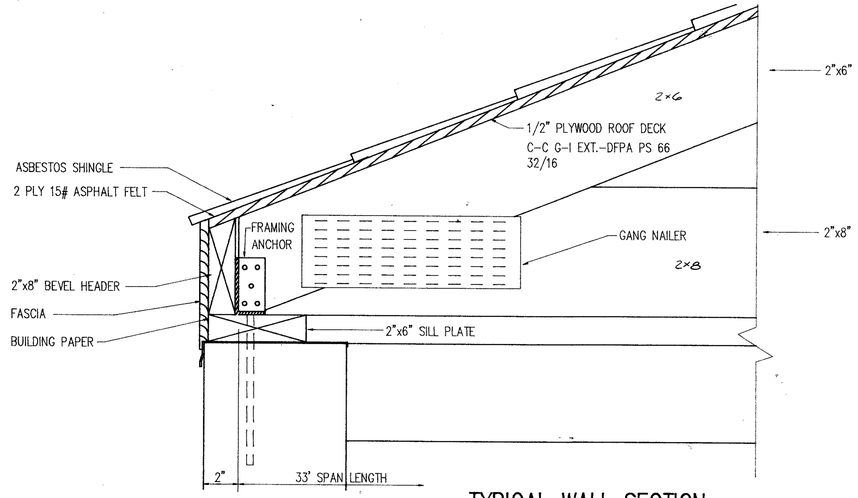

TYPICAL WALL SECTION
SCALE: 3" = 1'-0"

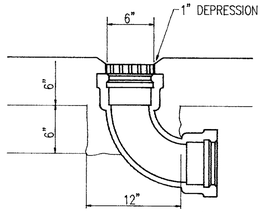

DRAIN
N.T.S.

Note. All Wood surfaces shall be field coated with Osmose K-33 Wood Preservative prior to erection

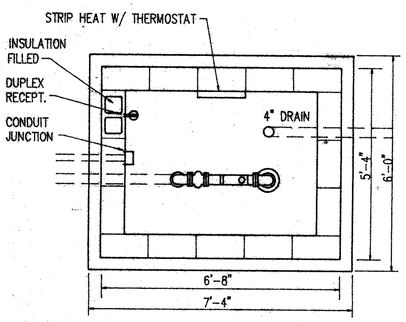

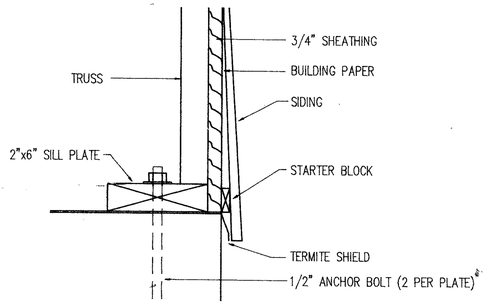

SILL DETAIL
SCALE: 3"=1'-0"

* 8" FOR RETAINING WALL AND WELL HOUSE WALLS OTHER THAN 12"

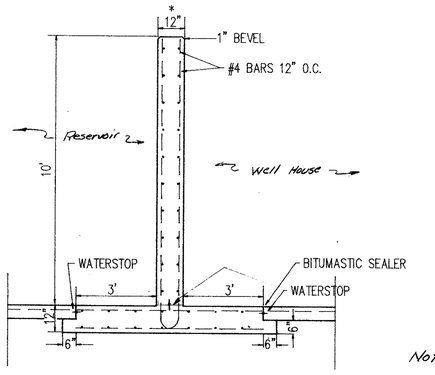

TYPICAL WALL SECTION
SCALE: 3/8"=1'-0"

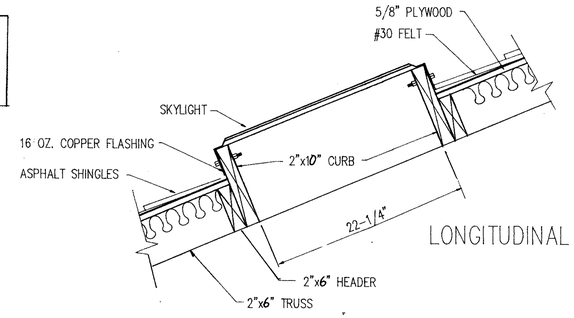

LONGITUDINAL SECTION

SKYLIGHT DETAILS
1-1/2" = 1'-0"

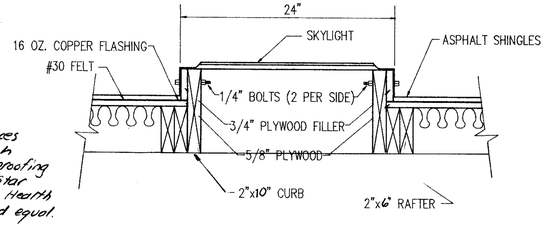

CROSS SECTION

Note: All Concrete surfaces to be Coated with a concrete waterproofing compound "Five Star Waterproofing" or Health Department approved equal.

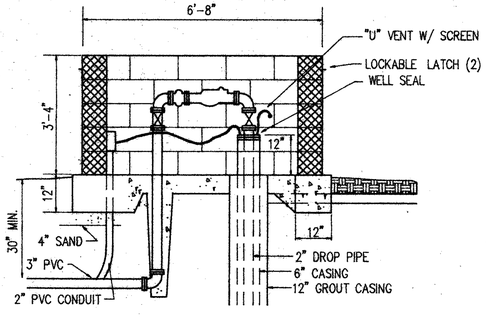

WELL #2 ENCLOSURE
SCALE: 1/2"=1'-0"

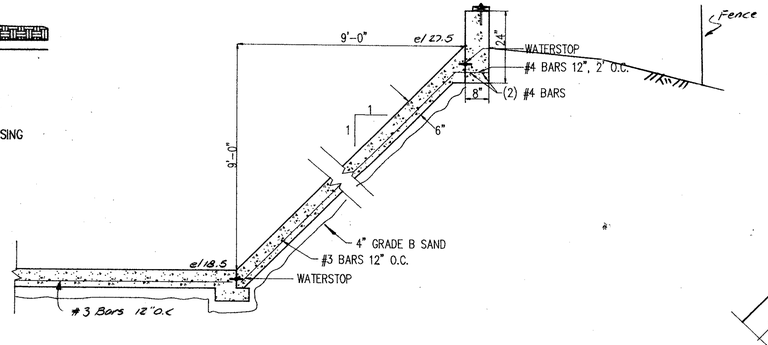

RESERVOIR WALL SECTION
SCALE: 1/2"=1'-0"

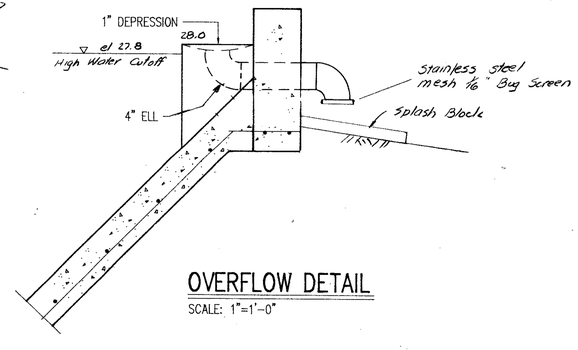

OVERFLOW DETAIL
SCALE: 1"=1'-0"

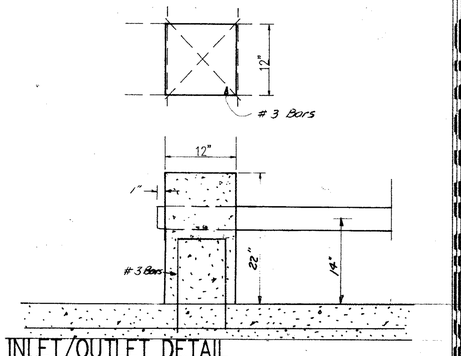

INLET/OUTLET DETAIL
SCALE: 1"=1'-0"

711 NORTH COURTHOUSE ROAD
RICHMOND, VIRGINIA 23236
TELEPHONE: (804) 794-3500

8803 STAPLES MILL ROAD
RICHMOND, VIRGINIA 23228
TELEPHONE: (804) 262-7396

4411 CROSSING BOULEVARD
PRINCE GEORGE, VIRGINIA 23875
TELEPHONE: (804) 458-8685

PLANNERS * SURVEYORS * ARCHITECTS * ENGINEERS * LANDSCAPE ARCHITECTS

COMMONWEALTH OF VIRGINIA
WALTER M. ALTMAN III
LICENSE No. 11039
PROFESSIONAL ENGINEER

REVISION DESCRIPTION	DATE
	12/15/88
	5/22/89

DATE	9-27-88
DRAWN BY	BRG
DESIGNED BY	WMA III
CHECKED BY	
SCALE	AS SHOWN

JORDAN ON THE JAMES

BLAND DISTRICT, PRINCE GEORGE, VIRGINIA
PUMP STATION ARCHITECTURAL PLANS

FINAL

SHEET NO. 18 of 19

JOB NO. 8707-04