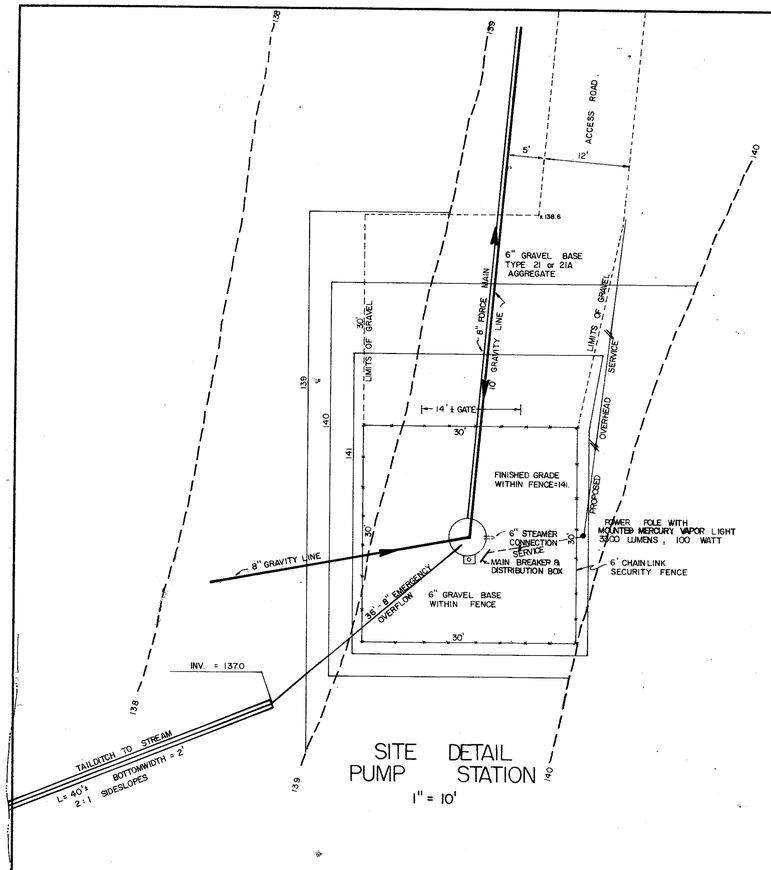

SITE DETAIL
PUMP STATION
1" = 10'

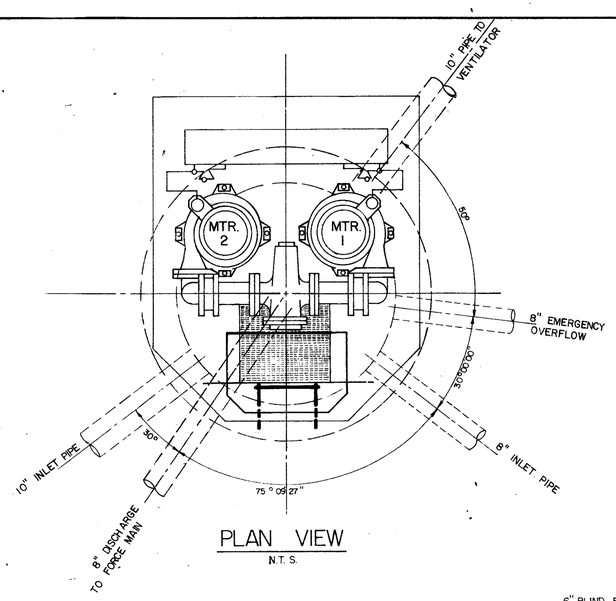

PLAN VIEW
N.T.S.

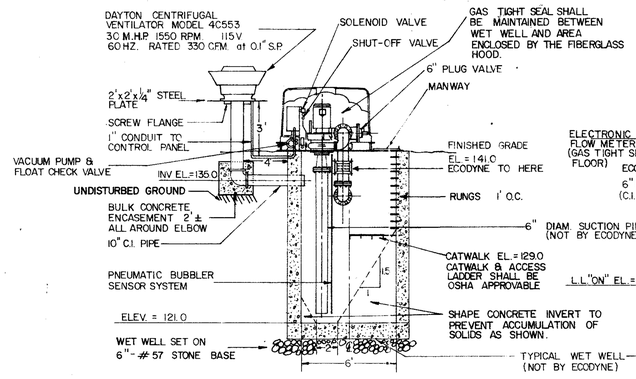

SIDE ELEVATION
N.T.S.

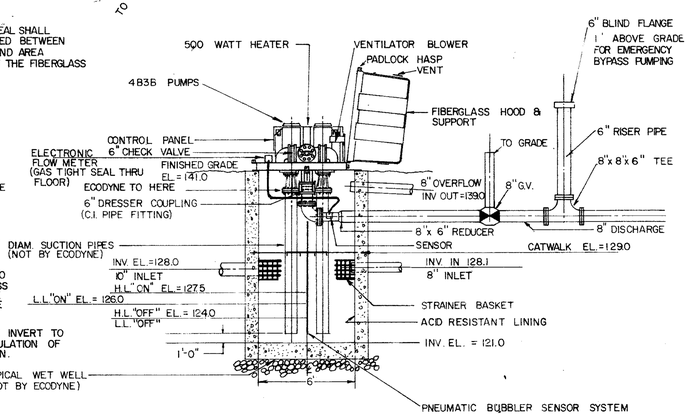

FRONT ELEVATION
N.T.S.

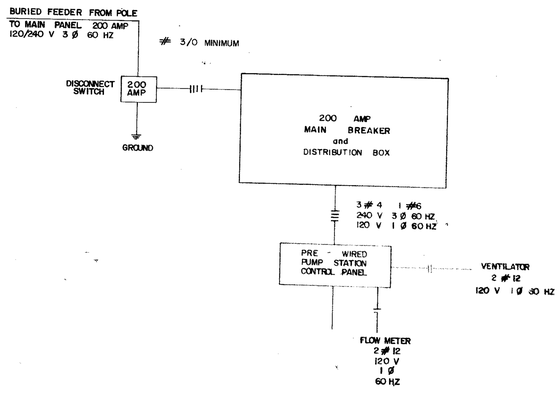

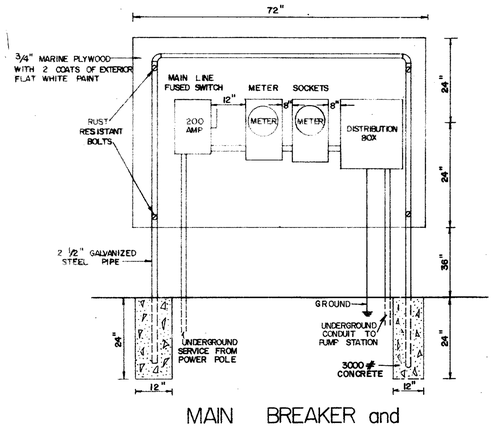

MAIN BREAKER and
DISTRIBUTION BOX
N.T.S.

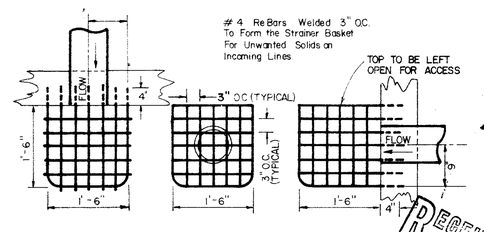

STRAINER BASKET DETAIL
N.T.S.

RECEIVED
AUG 3 1981
PRO
RECEIVED
JUL 9 1981
STATE DEPT. OF HEALTH
DIVISION OF WATER PROGRAMS
VA. BEACH REGIONAL OFFICE

COMMONWEALTH OF VIRGINIA
CHARLES E. TOWNES
CERTIFICATE No.
10478
PROFESSIONAL ENGINEER

PROPOSED PUMP STATION
JOHNSON ROAD
SEWER IMPROVEMENTS

SCALE: NO SCALE	APPROVED BY:	DRAWN BY GMcG
DATE: MARCH 25, 1981		REVISED

PRINCE GEORGE COUNTY DINWIDDIE COUNTY
CITY OF PETERSBURG

CHARLES C. TOWNES & ASSOCIATES
CIVIL ENGINEERS, PLANNERS, LAND SURVEYORS
COLONIAL HEIGHTS, VIRGINIA

DRAWING NUMBER