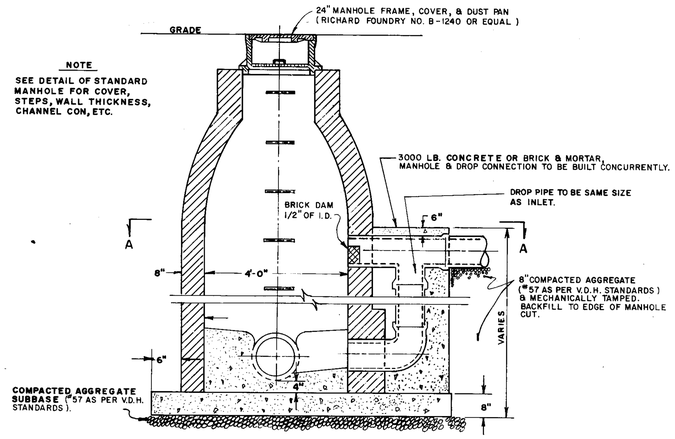

STANDARD DROP MANHOLE

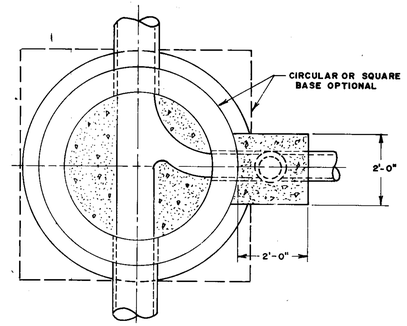

SECTION A-A

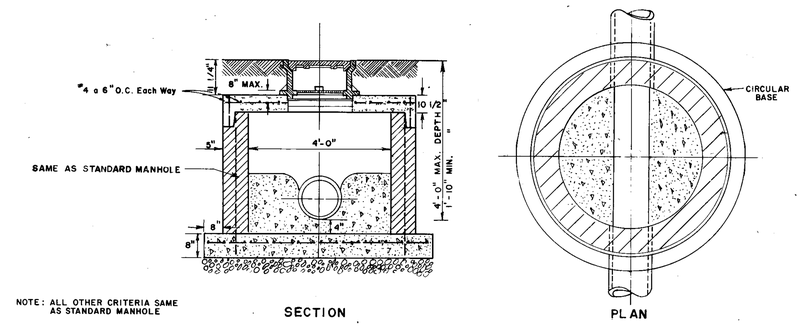

SHALLOW MANHOLE

(FOR MANHOLES LESS THAN 4'-0" DEEP)

STANDARD SEWER MANHOLE

NO SCALE

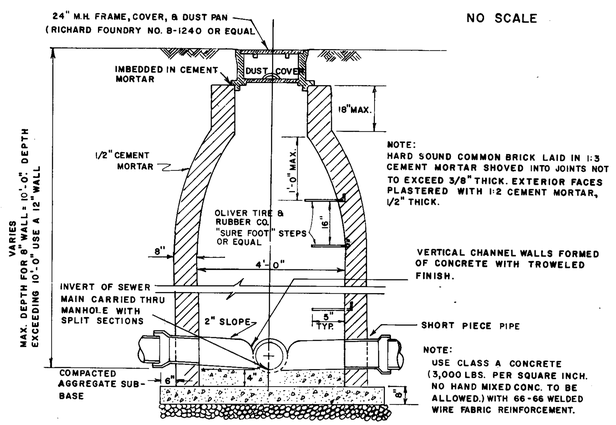

CHANNELS OF TRIBUTARIES TO BE FORMED OUT OF BRICK AND IN A CONTINUOUS CURVE, SURFACED WITH CEMENT MORTAR.

TRIBUTARIES SHALL NOT BE MORE THAN 2' ABOVE MAIN INVERT UNLESS DROP CONNECTION IS USED.

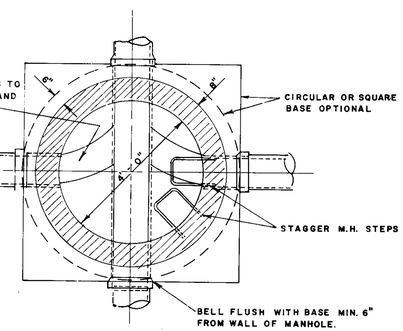

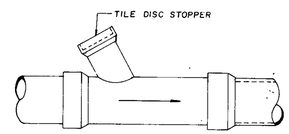

6" X "D" Y BRANCH

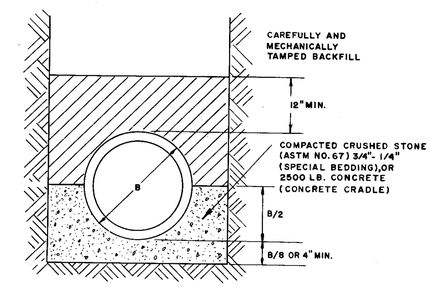

CLASS "B" BEDDING

(FOR USE IN DEEP SEWERS OR UNSTABLE SOIL CONDITION AS DIRECTED BY ENGINEER)

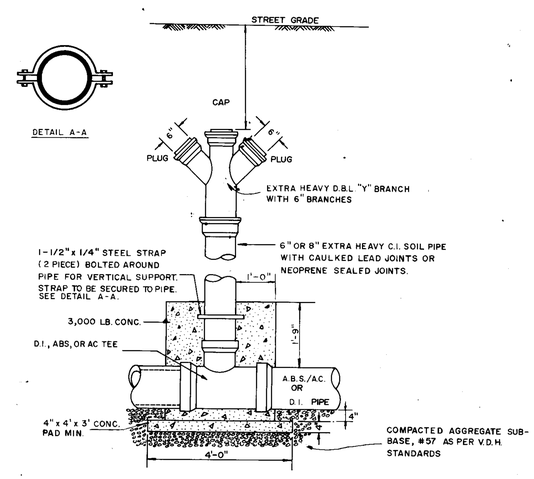

STANDARD VERTICAL RISER

(TO BE USED FOR LATERAL LINES TO SEWERS GREATER THAN 8' DEEP)

CONC. TO BE POURED ONLY IN PRESENCE OF COUNTY INSPECTOR.

NOTE: THIS DETAIL IS TO BE USED TO ESTABLISH THE BASIS OF PAYMENT FOR BORROW MATERIAL AND PAVEMENT REPLACEMENT PER LINEAR FOOT OF GRAVITY SEWER. ADDITIONAL QUANTITIES WILL BE DONE AT THE CONTRACTORS OWN EXPENSE.

SEE SHEET A OF A FOR PAVEMENT REPLACEMENT SCHEDULE.

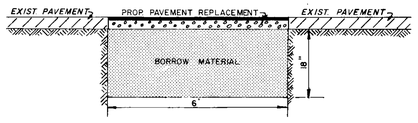

BORROW MATERIAL AND PAVEMENT REPLACEMENT DETAIL

TALBOT & ASSOCIATES, Ltd.
ENGINEERS • PLANNERS • SURVEYORS
VIRGINIA BEACH, VIRGINIA

DESIGNED	DRAWN	CHECKED
R.L.B.	K.G.S.	R.L.B.
APPROVED	DATE	SCALE
W.P.M.	1-3-76	NONE
PROJ. NO. 3079-1	FILE NO. S-1-38	8 OF 8

DETAIL SHEET

JEFFERSON PARK

PHASE II

WASTEWATER COLLECTION SYSTEM

P.G.C. PROJ. SJP-4