GENERAL NOTES

1. Prior to construction within any existing public right of way, the contractor shall obtain a permit from the office of the Virginia Department of Highways and Transportation, and from the City of Hopewell on Rt. 36.

2. Prior to construction or excavation, the contractor shall assume the responsibility of locating any underground utilities (public or private) that may exist and cross through the area of construction, that are not shown on these plans.

3. The contractor shall be responsible for repairing at his expense, any existing utilities damaged during construction.

4. The contractor shall be responsible for replacing with matching materials, any driveways, walks, curbs, etc., that must be cut or are damaged during construction.

5. The contractor shall provide temporary drainage during construction in areas that may be damaged by flooding.

6. All sanitary sewers and manholes shall be constructed in accordance with the standards and specifications and under the supervision and inspection of the Department of Utilities, Prince George County.

7. Pipe material for gravity sewers shall be acroylonitrile-butadiene-styrene (ABS) composite pipe, **or ductile iron, or osbestos cement**.

8. All laterals shall be 6" acroylonitrile-butadiene-styrene (ABS) composite pipe, **or osbestos cement**.

9. Separation of water mains and sewers.

   A. Parallel Installation

      1. Normal conditions--water mains shall be laid at least 10 feet horizontally from any sanitary sewer, storm sewer or sewer manhole, whenever possible the distance shall be measured edge-to-edge.

      2. Unusual conditions--when local conditions prevent a horizontal separation of 10', a water main may be laid closer to a storm or sanitary sewer, provided that:

         a. The bottom of the water main is at least 18" above the top of the sewer.
         b. Where this vertical separation cannot be obtained, the sewer shall be constructed of materials and with joints that are equivalent to water main standards of construction and shall be pressure tested to assure watertightness prior to backfilling.

   B. Crossings

      1. Normal conditions--water mains crossing house sewer on sanitary sewers shall be laid to provide a separation of at least 18 inches between the bottom of the water main and the top of the sewer, whenever possible.

      2. Unusual conditions--when local conditions prevent a vertical separation as described in B-1, the following construction shall be used:

         a. Sewers passing over or under water mains should be constructed of the materials described in A-2.
         b. Water mains passing under sewers shall, in addition, be protected by providing:

            1. A vertical separation of at least 18 inches between the bottom of the sewer and the top of water mains.
            2. Adequate structural support for the sewers to prevent excessive deflection of joints and settling on and breaking the water mains.
            3. That the length of water pipe be centered at the point of crossing so that the joints will be equidistant and as far as possible from the sewer.

         c. Sewer manholes--no water pipe shall pass through or come into contact with any part of a sewer or sewer manhole.

10. Sewer service laterals to include 6" ABS pipe, **or osbestos cement** fitted with cleanout cover, such as "panella cleanout", panella industries, Baltimore, Md., or approved equal.

11. The entire Wastewater Collection System shall be constructed in accordance with the requirements of the Virginia Department of Health.

12. Topographic information on these plans relating to physical features was done by Abrams Aerial Survey Corporation, manuscript dated November 15, 1976.

13. Other survey and topographic information was done by Talbot and Associates, dated December 13, 1976 (Refer to Field book 340 pages 1-38).

14. PRIOR TO CONNECTING TO EXISTING GRAVITY SEWER THE CONTRACTOR IS TO CONTACT THE DEPARTMENT OF PUBLIC UTILITIES, PRINCE GEORGE COUNTY.

15. ALL MANHOLES LOCATED WITHIN THE PAVEMENT SHOULD BE FLUSH WITH THE PAVEMENT AND ADJUSTABLE COLLARS SHOULD BE PROVIDED IN ORDER TO INSURE THAT THE MANHOLE CAN BE ADJUSTED WHEN RESURFACING TAKES PLACE.

HALF SECTION

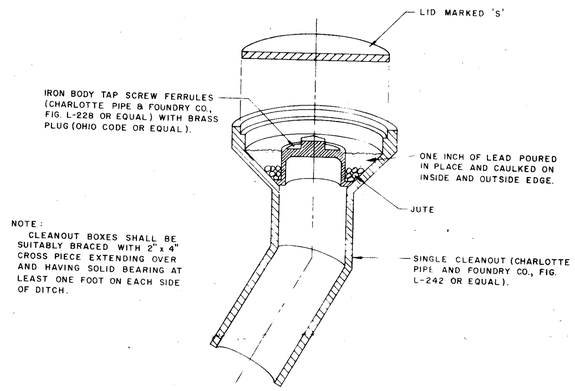

NOTE:
CLEANOUT BOXES SHALL BE SUITABLY BRACED WITH 2" x 4" CROSS PIECE EXTENDING OVER AND HAVING SOLID BEARING AT LEAST ONE FOOT ON EACH SIDE OF DITCH.

HOUSE LATERAL CLEANOUT

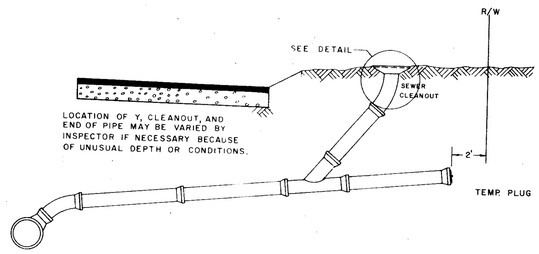

TYPICAL LATERAL LAYOUT

PRECAST SEWER MANHOLE

(SHALLOW MANHOLE) FOR MANHOLES LESS THAN 5'-0" TO TOP OF ADJUSTMENT.

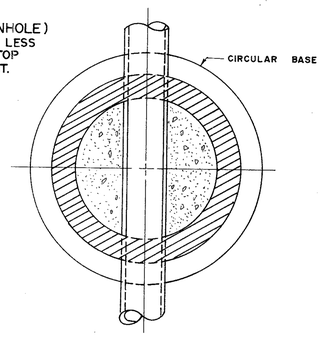

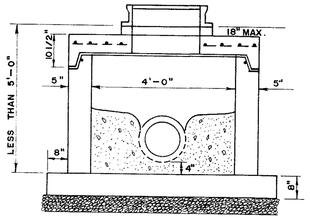

ALL OTHER CRITERIA TO BE THE SAME AS FOR STANDARD PRECAST SEWER MANHOLE

STANDARD PRECAST SEWER MANHOLE

REQUIREMENTS

1. MANHOLE SHALL MEET ALL REQUIREMENTS OF ASTM C-478-72.
2. O-RING JOINT SHALL MEET ALL REQUIREMENTS OF ASTM C-361. SPIGOT SHALL BE COMPATIBLE WITH QUINN MACH. FORM & RING OR APPROVED EQUAL.
3. CONCRETE SHALL HAVE MIN. COMPRESSIVE STRENGTH OF 4,000 P.S.I.
4. REINFORCING FABRIC SHALL MEET ASTM A-185-72
5. BASES SHALL BE EXTENDED MONOLITHIC TYPE.
6. STANDARD INVERT ELEV. OF NO GREATER THAN 1 FT. DIFFERENCE SHOULD BE DESIGN CRITERIA. IF GREATER THAN 2 FT., USE OUTSIDE DROP CONNECTION.
7. CONTRACTOR MUST USE STUBS OF APPROVED PIPE IN & OUT OF M.H. NOT TO EXCEED WIDTH OF EXTENDED BASE OF M.H.

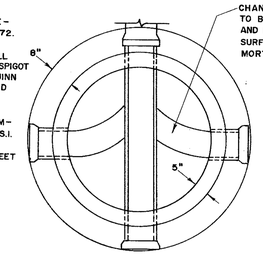

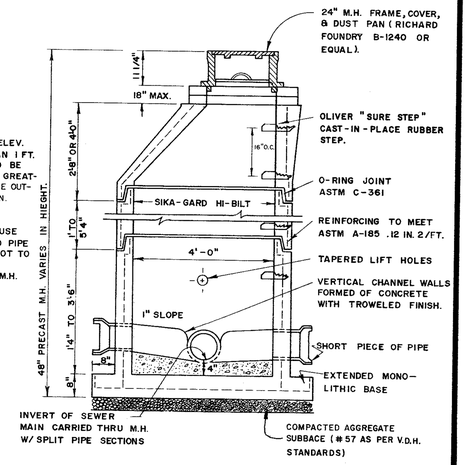

NOTES

1. JOINT DESIGN AND GASKET MEET ASTM C-361-72 AND SHALL CONFORM TO QUINN MFG. SPIGOT RING OR APPROVED EQUAL.
2. REINFORCING DESIGN MEETS ASTM A-185-64.

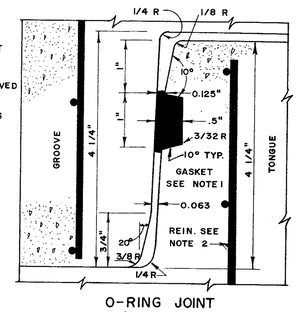

O-RING JOINT (STANDARD)

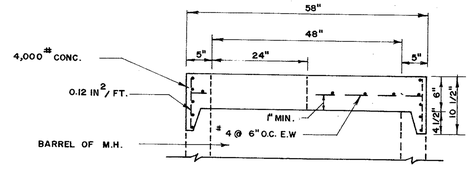

FLATTOP SECTION A-A

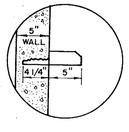

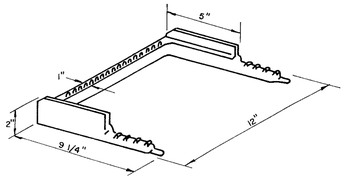

OLIVER TIRE & RUBBER CO. "sure foot" STEP

STEP IS MADE OF NO. 4 REINFORCING ROD COMPLETELY ENCASED IN A CORROSION RESISTANT RUBBER.

THESE STEPS ARE CAST-IN-PLACE. THE STEP IS POURED INTEGRALLY WITH THE MANHOLE SECTION & IS NOT MORTARED OR GROUTED IN LATER.

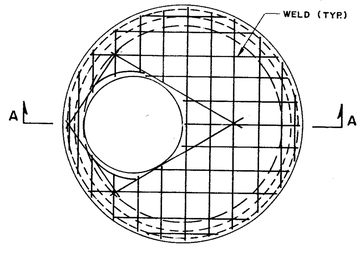

TALBOT & ASSOCIATES, Ltd. ENGINEERS • PLANNERS • SURVEYORS VIRGINIA BEACH, VIRGINIA		
DESIGNED R.L.B.	DRAWN K.G.S.	CHECKED R.L.B.
APPROVED W.P.M.	DATE 1-3-77	SCALE NONE
PROJ. NO. 3079-1	FILE NO. S-1-38	7 OF 8

DETAIL SHEET

JEFFERSON PARK

PHASE II

WASTEWATER COLLECTION SYSTEM

P.G.C. PROJ. SJP-4