THRUST BLOCK DETAIL

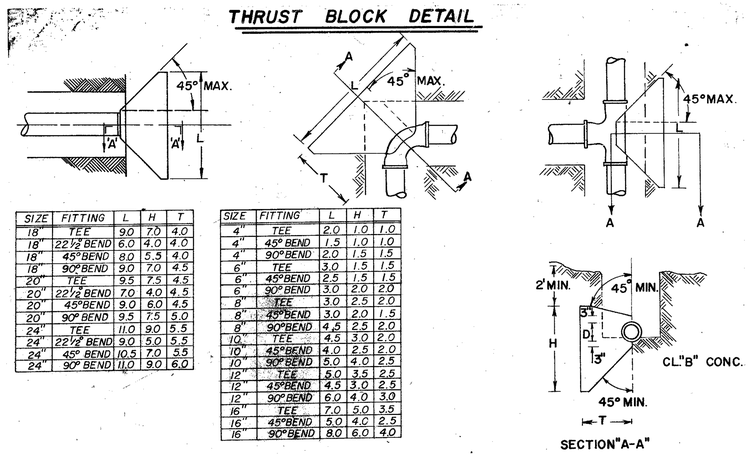

SIZE	FITTING	L	H	T
18"	TEE	9.0	7.0	4.0
18"	22½° BEND	6.0	4.0	4.0
18"	45° BEND	8.0	5.5	4.0
18"	90° BEND	9.0	7.0	4.5
20"	TEE	9.5	7.5	4.5
20"	22½° BEND	7.0	4.0	4.5
20"	45° BEND	9.0	6.0	4.5
20"	90° BEND	9.5	7.5	5.0
24"	TEE	11.0	9.0	5.5
24"	22½° BEND	9.0	5.0	5.5
24"	45° BEND	10.5	7.0	5.5
24"	90° BEND	11.0	9.0	6.0

SIZE	FITTING	L	H	T
4"	TEE	2.0	1.0	1.0
4"	45° BEND	1.5	1.0	1.0
4"	90° BEND	2.0	1.5	1.5
6"	TEE	3.0	1.5	1.5
6"	45° BEND	2.5	1.5	1.5
6"	90° BEND	3.0	2.0	2.0
8"	TEE	3.0	2.5	2.0
8"	45° BEND	3.0	2.0	1.5
8"	90° BEND	4.5	2.5	2.0
10"	TEE	4.5	3.0	2.0
10"	45° BEND	4.0	2.5	2.0
10"	90° BEND	5.0	4.0	2.5
12"	TEE	5.0	3.5	2.5
12"	45° BEND	4.5	3.0	2.5
12"	90° BEND	6.0	4.0	3.0
16"	TEE	7.0	5.0	3.5
16"	45° BEND	5.0	4.0	2.5
16"	90° BEND	8.0	6.0	4.0

TYPE F ANCHOR SCHEDULE

NOTE: ANCHOR DIMENSIONS FOR 22 1/2° BEND SHALL CONFORM TO DIMENSIONS FOR 45° BEND, UNLESS OTHERWISE NOTED.

PLUG ANCHORS - 90° BEND ANCHORS.

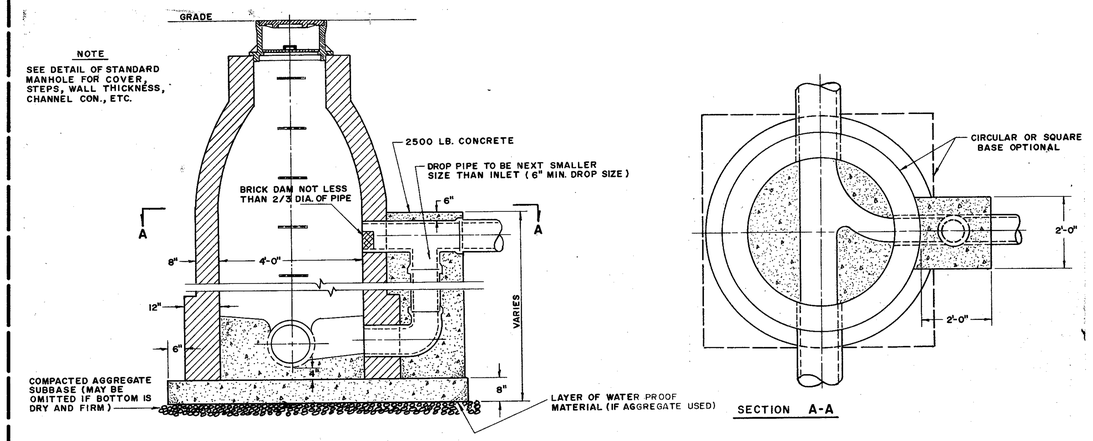

STANDARD DROP MANHOLE

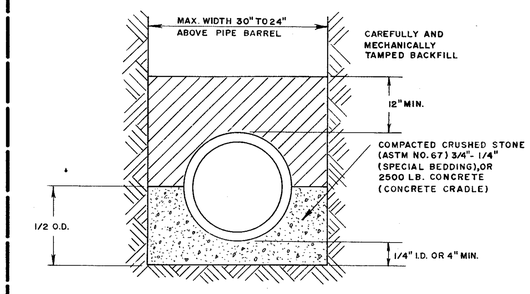

CLASS "B" BEDDING

(FOR USE IN DEEP SEWERS OR UNSTABLE SOIL CONDITION AS DIRECTED BY ENGINEER)

AIR RELEASE DETAIL

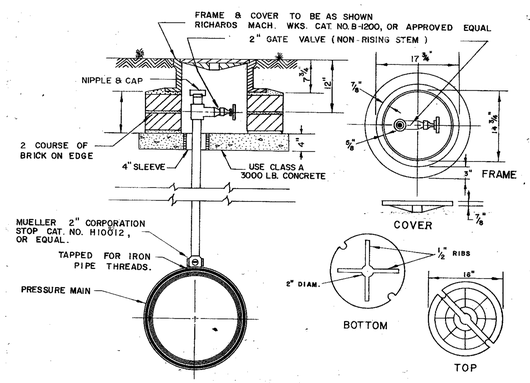

NOTE: 2" TAP FOR AIR VENT SHALL BE STANDARD THREADED TAP OR SADDLE TAP DEPENDING ON MANUFACTURER'S RECOMENDATION FOR TYPE AND THICKNESS OF PIPE USED.

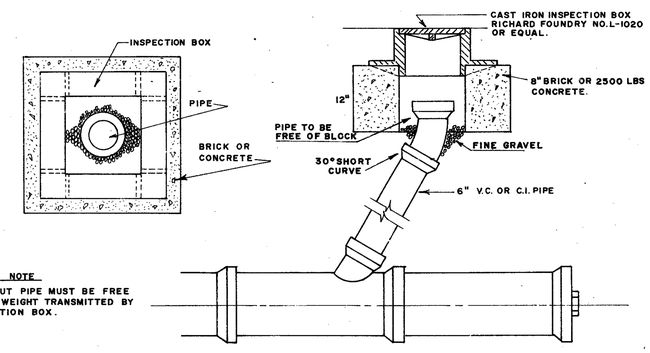

NOTE

CLEANOUT PIPE MUST BE FREE OF ANY WEIGHT TRANSMITTED BY INSPECTION BOX.

CLEANOUT

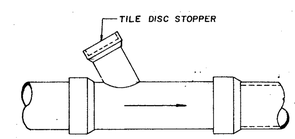

6" X "D" Y BRANCH

NOTE: ALL Y'S TO BE LOCATED IN THE FIELD, ALL STUBBED TO THE REAR OF THE CURBLINE

WHERE SEWER LINES ARE OVER 7' DEEP HOUSE CONNECTIONS ARE TO BE MADE TO MANHOLES OR TO RISERS SET BETWEEN MANHOLES.

VERTICAL RISER PIPE

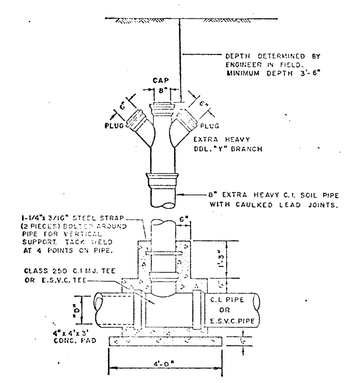

NOTE:

CONTRACTOR TO COMPLETELY PLUG AND SEAL HORIZONTAL PIPE WITH BRICK DAM IN IT TO PREVENT FORCE MAIN FROM DISCHARGING INTO MANHOLE THROUGH THIS PIPE. ALL FLOW TO ENTER MANHOLE THROUGH DROP PIPE.

DETAIL

FOR DISCHARGE INTO COUSINS AVE. MANHOLE

(SEE SHEET # 1)

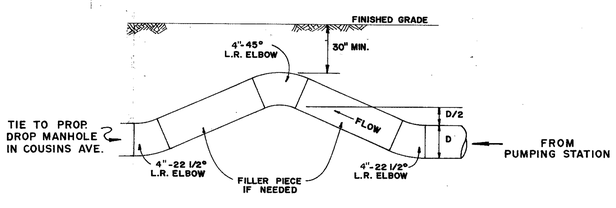

COMMONWEALTH OF VIRGINIA
W. P. McDOWELL, III
CERTIFICATE No. 5670
REGISTERED PROFESSIONAL ENGINEER

TALBOT & ASSOCIATES, Ltd.
ENGINEERS • PLANNERS • SURVEYORS
VIRGINIA BEACH, VIRGINIA

DESIGNED	DRAWN	CHECKED
WPMcD	HBH	WPMcD
APPROVED	DATE	SCALE
WPMcD	5-14-76	N.T.S.
PROJ. NO.	FILE NO.	
3049-2	5-1-13	3 of 4

DETAIL SHEET

JEFFERSON PARK WASTEWATER COLLECTION SYSTEM

P.G.C. PROJ. SJP-2