9VAC25-840-40. Minimum standards.

A VESCP must be consistent with the following criteria, techniques and methods:

1. Permanent or temporary soil stabilization shall be applied to denuded areas within seven days after final grade is reached on any portion of the site. Temporary soil stabilization shall be applied within seven days to denuded areas that may not be at final grade but will remain dormant for longer than 14 days. Permanent stabilization shall be applied to areas that are to be left dormant for more than one year.

2. During construction of the project, soil stock piles and borrow areas shall be stabilized or protected with sediment trapping measures. The applicant is responsible for the temporary protection and permanent stabilization of all soil stockpiles on site as well as borrow areas and soil intentionally transported from the project site.

3. A permanent vegetative cover shall be established on denuded areas not otherwise permanently stabilized. Permanent vegetation shall not be considered established until a ground cover is achieved that is uniform, mature enough to survive and will inhibit erosion.

4. Sediment basins and traps, perimeter dikes, sediment barriers and other measures intended to trap sediment shall be constructed as a first step in any land-disturbing activity and shall be made functional before upslope land disturbance takes place.

5. Stabilization measures shall be applied to earthen structures such as dams, dikes and diversions immediately after installation.

6. Sediment traps and sediment basins shall be designed and constructed based upon the total drainage area to be served by the trap or basin.

a. The minimum storage capacity of a sediment trap shall be 134 cubic yards per acre of drainage area and the trap shall only control drainage areas less than three acres.

b. Surface runoff from disturbed areas that is comprised of flow from drainage areas greater than or equal to three acres shall be controlled by a sediment basin. The minimum storage capacity of a sediment basin shall be 134 cubic yards per acre of drainage area. The outfall system shall, at a minimum, maintain the structural integrity of the basin during a 25-year storm of 24-hour duration. Runoff coefficients used in runoff calculations shall correspond to a bare earth condition or those conditions expected to exist while the sediment basin is utilized.

7. Cut and fill slopes shall be designed and constructed in a manner that will minimize erosion. Slopes that are found to be eroding excessively within one year of permanent stabilization shall be provided with additional slope stabilizing measures until the problem is corrected.

8. Concentrated runoff shall not flow down cut or fill slopes unless contained within an adequate temporary or permanent channel, flume or slope drain structure.

9. Whenever water seeps from a slope face, adequate drainage or other protection shall be provided.

10. All storm sewer inlets that are made operable during construction shall be protected so that sediment-laden water cannot enter the conveyance system without first being filtered or otherwise treated to remove sediment.

11. Before newly constructed stormwater conveyance channels or pipes are made operational, adequate outlet protection and any required temporary or permanent channel lining shall be installed in both the conveyance channel and receiving channel.

12. When work in a live watercourse is performed, precautions shall be taken to minimize encroachment, control sediment transport and stabilize the work area to the greatest extent possible during construction. Nonerodible material shall be used for the construction of causeways and cofferdams. Earthen fill may be used for these structures if armored by nonerodible cover materials.

13. When a live watercourse must be crossed by construction vehicles more than twice in any six-month period, a temporary vehicular stream crossing constructed of nonerodible material shall be provided.

14. All applicable federal, state and local requirements pertaining to working in or crossing live watercourses shall be met.

15. The bed and banks of a watercourse shall be stabilized immediately after work in the watercourse is completed.

16. Underground utility lines shall be installed in accordance with the following standards in addition to other applicable criteria:

a. No more than 500 linear feet of trench may be opened at one time.

b. Excavated material shall be placed on the uphill side of trenches.

c. Effluent from dewatering operations shall be filtered or passed through an approved sediment trapping device, or both, and discharged in a manner that does not adversely affect flowing streams or off-site property.

d. Material used for backfilling trenches shall be properly compacted in order to minimize erosion and promote stabilization.

e. Restabilization shall be accomplished in accordance with this chapter.

f. Applicable safety requirements shall be complied with.

17. Where construction vehicle access routes intersect paved or public roads, provisions shall be made to minimize the transport of sediment by vehicular tracking onto the paved surface. Where sediment is transported onto a paved or public road surface, the road surface shall be cleaned thoroughly at the end of each day. Sediment shall be removed from the roads by shoveling or sweeping and transported to a sediment control disposal area. Street washing shall be allowed only after sediment is removed in this manner. This provision shall apply to individual development lots as well as to larger land-disturbing activities.

18. All temporary erosion and sediment control measures shall be removed within 30 days after final site stabilization or after the temporary measures are no longer needed, unless otherwise authorized by the VESCP authority. Trapped sediment and the disturbed soil areas resulting from the disposition of temporary measures shall be permanently stabilized to prevent further erosion and sedimentation.

19. Properties and waterways downstream from development sites shall be protected from sediment deposition, erosion and damage due to increases in volume, velocity and peak flow rate of stormwater runoff for the stated frequency storm of 24-hour duration in accordance with the following standards and criteria. Stream restoration and relocation projects that incorporate natural channel design concepts are not man-made channels and shall be exempt from any flow rate capacity and velocity requirements for natural or man-made channels:

a. Concentrated stormwater runoff leaving a development site shall be discharged directly into an adequate natural or man-made receiving channel, pipe or storm sewer system. For those sites where runoff is discharged into a pipe or pipe system, downstream stability analyses at the outfall of the pipe or pipe system shall be performed.

b. Adequacy of all channels and pipes shall be verified in the following manner:

(1) The applicant shall demonstrate that the total drainage area to the point of analysis within the channel is one hundred times greater than the contributing drainage area of the project in question; or

(2) (a) Natural channels shall be analyzed by the use of a two-year storm to verify that stormwater will not overtop channel banks nor cause erosion of channel bed or banks.

(b) All previously constructed man-made channels shall be analyzed by the use of a ten-year storm to verify that stormwater will not overtop its banks and by the use of a two-year storm to demonstrate that stormwater will not cause erosion of channel bed or banks; and

(c) Pipes and storm sewer systems shall be analyzed by the use of a ten-year storm to verify that stormwater will be contained within the pipe or system.

c. If existing natural receiving channels or previously constructed man-made channels or pipes are not adequate, the applicant shall:

(1) Improve the channels to a condition where a ten-year storm will not overtop the banks and a two-year storm will not cause erosion to the channel, the bed, or the banks; or

(2) Improve the pipe or pipe system to a condition where the ten-year storm is contained within the appurtenances;

(3) Develop a site design that will not cause the pre-development peak runoff rate from a two-year storm to increase when runoff outfalls into a natural channel or will not cause the pre-development peak runoff rate from a ten-year storm to increase when runoff outfalls into a man-made channel; or

(4) Provide a combination of channel improvement, stormwater detention or other measures which is satisfactory to the VESCP authority to prevent downstream erosion.

d. The applicant shall provide evidence of permission to make the improvements.

e. All hydrologic analyses shall be based on the existing watershed characteristics and the ultimate development condition of the subject project.

f. If the applicant chooses an option that includes stormwater detention, he shall obtain approval from the VESCP of a plan for maintenance of the detention facilities. The plan shall set forth the maintenance requirements of the facility and the person responsible for performing the maintenance.

g. Outfall from a detention facility shall be discharged to a receiving channel, and energy dissipators shall be placed at the outfall of all detention facilities as necessary to provide a stabilized transition from the facility to the receiving channel.

h. All on-site channels must be verified to be adequate.

i. Increased volumes of sheet flows that may cause erosion or sedimentation on adjacent property shall be diverted to a stable outlet, adequate channel, pipe or pipe system, or to a detention facility.

j. In applying these stormwater management criteria, individual lots or parcels in a residential, commercial or industrial development shall not be considered to be separate development projects. Instead, the development, as a whole, shall be considered to be a single development project. Hydrologic parameters that reflect the ultimate development condition shall be used in all engineering calculations.

k. All measures used to protect properties and waterways shall be employed in a manner which minimizes impacts on the physical, chemical and biological integrity of rivers, streams and other waters of the state.

l. Any plan approved prior to July 1, 2014, that provides for stormwater management that addresses any flow rate capacity and velocity requirements for natural or man-made channels shall satisfy the flow rate capacity and velocity requirements for natural or man-made channels if the practices are designed to (i) detain the water quality volume and to release it over 48 hours; (ii) detain and release over a 24-hour period the expected rainfall resulting from the one year, 24-hour storm; and (iii) reduce the allowable peak flow rate resulting from the 1.5, 2, and 10-year, 24-hour storms to a level that is less than or equal to the peak flow rate from the site assuming it was in a good forested condition, achieved through multiplication of the forested peak flow rate by a reduction factor that is equal to the runoff volume from the site when it was in a good forested condition divided by the runoff volume from the site in its proposed condition, and shall be exempt from any flow rate capacity and velocity requirements for natural or man-made channels as defined in any regulations promulgated pursuant to § 62.1-44.15:54 or 62.1-44.15:65 of the Act.

m. For plans approved on and after July 1, 2014, the flow rate capacity and velocity requirements of § 62.1-44.15:52 A of the Act and this subsection shall be satisfied by compliance with water quantity requirements in the Stormwater Management Act (§ 62.1-44.15:24 et seq. of the Code of Virginia) and attendant regulations, unless such land-disturbing activities are in accordance with 9VAC25-870-48 of the Virginia Stormwater Management Program (VSMP) Regulations.

n. Compliance with the water quantity minimum standards set out in 9VAC25-870-66 of the Virginia Stormwater Management Program (VSMP) Regulations shall be deemed to satisfy the requirements of subdivision 19 of this subsection.

TABLE 3.32-E
(Revised June 2003)
PERMANENT SEEDING SPECIFICATIONS FOR COASTAL PLAIN AREA

LAND USE	SEED[1] SPECIES	APPLICATION RATES
Minimum Care Lawn (Commercial or Residential)	Tall Fescue[1] or Bermudagrass[1]	175 - 200 lbs. / 75 lbs.
High-Maintenance Lawn	Tall Fescue[1] or Bermudagrass[1] (seed) or Bermudagrass[1] (by other vegetative establishment method, see Std. & Spec. 3.34)	200-250 lbs. / 40 lbs. (unhulled) 30 lbs. (hulled)
General Slope (3:1 or less)	Tall Fescue[1] Red Top Grass or Creeping Red Fescue Seasonal Nurse Crop[2]	128 lbs. 2 lbs. 20 lbs. TOTAL: 150 lbs.
Low-Maintenance Slope (Steeper than 3:1)	Tall Fescue[1] Bermudagrass[1] Red Top Grass or Creeping Red Fescue Seasonal Nurse Crop[2] Sericea Lespedeza[3]	93-108 lbs. 0-15 lbs. 2 lbs. 20 lbs. 20 lbs. TOTAL: 150 lbs.

1 - When selecting varieties of turfgrass, use the Virginia Crop Improvement Association (VCIA) recommended turfgrass variety list. Quality seed will bear a label indicating that they are approved by VCIA. A current turfgrass variety list is available at the local County Extension office or through VCIA at 804-746-4684 or at http://sukian.cses.vt.edu/html/Turf/turf/publications/publications2.html

2 - Use seasonal nurse crop in accordance with seeding dates as stated below:

February, March - April	Annual Rye
May 1st - August	Foxtail Millet
September, October - November 15th	Annual Rye
November 16th - January	Winter Rye

3 - May through October, use hulled seed. All other seeding periods, use unhulled seed. If Weeping Lovegrass is used, include in any slope or low maintenance mixture during warmer seeding periods, increase to 30 -40 lbs/acre.

FERTILIZER & LIME

- Apply 10-20-10 **fertilizer** at a rate of **500** lbs. / acre (or 12 lbs. / 1,000 sq. ft.)
- **Apply Pulverized Agricultural Limestone** at a rate of 2 tons/acre (or 90 lbs. / 1,000 sq. ft.)

NOTE:
- A soil test is necessary to determine the actual amount of lime required to adjust the soil pH of site.
- Incorporate the lime and fertilizer into the top 4 – 6 inches of the soil by disking or by other means.
- When applying Slowly Available Nitrogen, use rates available in Erosion & Sediment Control Technical Bulletin # 4, 2003 Nutrient Management for Development Sites at http://www.dcr.state.va.us/sw/es8a.htm#pubs

TABLE 3.31-B
(Revised June 2003)
TEMPORARY SEEDING SPECIFICATIONS QUICK REFERENCE FOR ALL REGIONS

SEED APPLICATION DATES	SPECIES	APPLICATION RATES
Sept. 1 - Feb. 15	50/50 Mix of Annual Ryegrass (lolium multi-florum) & Cereal (Winter) Rye (Secale cereale)	50 -100 (lbs/acre)
Feb. 16 - Apr. 30	Annual Ryegrass (lolium multi-florum)	60 - 100 (lbs/acre)
May 1 - Aug. 31	German Millet	50 (lbs/acre)

FERTILIZER & LIME

- Apply 10-10-10 **fertilizer** at a rate of 450 lbs. / acre (or 10 lbs. / 1,000 sq. ft.)
- **Apply Pulverized Agricultural Limestone** at a rate of 2 tons/acre (or 90 lbs. / 1,000 sq. ft.)

NOTE:
1 - A soil test is necessary to determine the actual amount of lime required to adjust the soil pH of site
2 - Incorporate the lime and fertilizer into the top 4 – 6 inches of the soil by disking or by other means.
3 - When applying Slowly Available Nitrogen, use rates available in Erosion & Sediment Control Technical Bulletin # 4, 2003 Nutrient Management for Development Sites at http://www.dcr.state.va.us/sw/es8a.htm#pubs

EROSION CONTROL GENERAL NOTES

1. CONTACT THE PRINCE GEORGE DEPT. OF INSPECTIONS AND CODE COMPLIANCE AT (804)722-8659 PRIOR TO COMMENCING ANY LAND DISTURBANCE ACTIVITIES ON THE SITE
2. UNLESS OTHERWISE INDICATED, ALL VEGETATIVE AND STRUCTURAL EROSION AND SEDIMENT CONTROL PRACTICES WILL BE CONSTRUCTED AND MAINTAINED ACCORDING TO MINIMUM STANDARDS AND SPECIFICATIONS OF THE PRINCE GEORGE COUNTY ORDINANCE AND THE VIRGINIA EROSION AND SEDIMENT CONTROL HANDBOOK, LATEST EDITION.
3. NOTIFY DIANE COOK AT 804-722-8673 ONE WEEK PRIOR TO THE PRECONSTRUCTION CONFERENCE, ONE WEEK PRIOR TO THE COMMENCEMENT OF LAND DISTURBING ACTIVITY, AND ONE WEEK PRIOR TO THE FINAL INSPECTION.
4. ALL EROSION AND SEDIMENT CONTROL MEASURES ARE TO BE PLACED PRIOR TO OR AS THE FIRST STEP IN CLEARING.
5. A COPY OF THE APPROVED EROSION AND SEDIMENT CONTROL PLAN SHALL BE MAINTAINED ON THE SITE AT ALL TIMES.
6. PRIOR TO COMMENCING LAND DISTURBING ACTIVITIES IN AREAS OTHER THAN INDICATED ON THESE PLANS (INCLUDING, BUT NOT LIMITED TO, OFF-SITE BORROW OR WASTE AREAS), THE CONTRACTOR SHALL SUBMIT A SUPPLEMENTARY EROSION CONTROL PLAN TO THE OWNER FOR REVIEW AND APPROVAL BY THE PLAN APPROVING AUTHORITY.
7. THE CONTRACTOR IS RESPONSIBLE FOR THE INSTALLATION OF ANY ADDITIONAL EROSION CONTROL MEASURES NECESSARY TO PREVENT EROSION AND SEDIMENTATION AS DETERMINED BY THE PLAN APPROVING AUTHORITY.
8. ALL DISTURBED AREAS ARE TO DRAIN TO APPROVED SEDIMENT CONTROL MEASURES AT ALL TIMES DURING LAND DISTURBING ACTIVITIES AND DURING SITE DEVELOPMENT UNTIL FINAL STABILIZATION IS ACHIEVED.
9. DURING DEWATERING OPERATIONS, WATER WILL BE PUMPED INTO AN APPROVED FILTERING DEVICE.
10. THE CONTRACTOR SHALL INSPECT ALL EROSION CONTROL MEASURES EVERY TWO WEEKS AND AFTER EACH RUNOFF-PRODUCING RAINFALL EVENT. ANY NECESSARY REPAIRS OR CLEANUP TO MAINTAIN THE EFFECTIVENESS OF THE EROSION CONTROL DEVICES SHALL BE MADE IMMEDIATELY.
11. PERMANENT OR TEMPORARY SOIL STABILIZATION SHALL BE APPLIED TO DENUDED AREAS WITHIN SEVEN DAYS AFTER FINAL GRADE IS REACHED ON ANY PORTION OF THE SITE. TEMPORARY SOIL STABILIZATION SHALL BE APPLIED WITHIN SEVEN DAYS TO DENUDED AREAS THAT MAY NOT BE AT FINAL GRADE BUT WILL REMAIN DORMANT FOR LONGER THEN 14 DAYS. PERMANENT STABILIZATION SHALL BE APPLIED TO AREAS THAT ARE LEFT DORMANT FOR MORE THAN ONE YEAR.
12. THE CONTRACTOR IS RESPONSIBLE FOR DAILY REMOVAL OF SEDIMENT THAT HAS BEEN TRANSPORTED ONTO A PAVED OR PUBLIC ROAD SURFACE.
13. THE CONTRACTOR SHALL BE RESPONSIBLE FOR PREVENTING SURFACE AND AIR MOVEMENT OF DUST FROM EXPOSED SOILS WHICH MAY PRESENT A HEALTH HAZARD, TRAFFIC SAFETY PROBLEM, OR HARM ANIMAL OR PLANT LIFE.

EROSION CONTROL NARRATIVE

PROJECT DESCRIPTION: THIS PROJECT CONSISTS OF THE CONSTRUCTION OF TWO OFFICE BUILDINGS. APPROXIMATELY 3.08 AC. OF LAND DISTURBANCE WILL OCCUR DURING THE CONSTRUCTION OF THIS SITE. THE LAND DISTURBANCE WILL INCLUDE CUT AND FILL GRADING ACTIVITIES.

EXISTING SITE CONDITIONS: THE SITE IS LOCATED ON THE EAST SIDE OF JEFFERSON PARK ROAD AT THE INTERSECTION OF JEFFERSON PARK ROAD AND BAILEY'S RIDGE BOULEVARD. THE AREA OF DEVELOPMENT GENERALLY SLOPES FROM THE NORTHWEST TO THE SOUTH EAST TO AN EXISTING STORM SEWER NETWORK.

ADJACENT AREAS: THE SITE IS SURROUNDED BY JEFFERSON PARK ROAD TO THE WEST, AN EXISTING COMMERCIAL DEVELOPMENT TO THE NORTH, BAILEY'S RIDGE DRIVE TO THE EAST, AND BAILEY'S RIDGE BLVD TO THE SOUTH.

OFFSITE AREAS: NO OFF-SITE AREAS WILL BE AFFECTED BY THIS DEVELOPMENT. IF AN OFF-SITE BORROW OR WASTE AREA IS USED, THEN THE CONTRACTOR SHALL SUBMIT A SUPPLEMENTARY EROSION CONTROL PLAN TO THE OWNER FOR REVIEW AND APPROVAL BY THE PLAN APPROVING AUTHORITY.

SOILS: THE SITE CONSISTS OF EMPORIA FINE SANDY LOAM, 2% TO 6% PERCENT SLOPES (MAPPING CODE 11B), EMPORIA FINE SANDY LOAM, 6% TO 10% (MAPPING CODE 11C), AND EMPORIA AND SLAGLE SOILS, 6% TO 15% (MAPPING CODE 13D) PER THE "SOIL SURVEY OF PRINCE GEORGE COUNT, VIRGINIA" PRODUCED BY THE UNITED STATES DEPARTMENT OF AGRICULTURE DATED 1980.

CRITICAL AREAS: SOILS LOCATED ON SITE MAY HAVE POTENTIAL FOR SEVERE EROSION. CONTRACTOR SHALL REGULARLY INSPECT EROSION CONTROL MEASURES TO ENSURE THEY ARE FUNCTIONING PROPERLY.

EROSION AND SEDIMENT CONTROL MEASURES: STRUCTURAL METHODS INCLUDING CONSTRUCTION ENTRANCE, PERIMETER SILT FENCE, CULVERT INLET PROTECTION, INLET PROTECTION, SEDIMENT TRAPS, DIVERSION DIKES, AND SAFETY FENCE WILL SERVE AS THE PRIMARY EROSION CONTROL MEASURES THROUGHOUT THE CONSTRUCTION PROCESS. VEGETATIVE MEASURES INCLUDING TEMPORARY AND PERMANENT SEEDING WILL ALSO BE USED.

PERMANENT STABILIZATION: PERMANENT OR TEMPORARY SOIL STABILIZATION SHALL BE APPLIED TO DENUDED AREAS WITHIN SEVEN DAYS AFTER FINAL GRADE IS REACHED ON ANY PORTION OF THE SITE. TEMPORARY SOIL STABILIZATION SHALL BE APPLIED WITHIN SEVEN DAYS TO DENUDED AREAS THAT MAY NOT BE AT FINAL GRADE BUT WILL REMAIN DORMANT FOR LONGER THEN 14 DAYS. PERMANENT STABILIZATION SHALL BE APPLIED TO AREAS THAT ARE LEFT DORMANT FOR MORE THAN ONE YEAR.

STORMWATER RUNOFF CONSIDERATIONS: WATER QUALITY WILL BE HANDLED THROUGH THE PURCHASE OF OFFSET NUTRIENT CREDITS. WATER QUANTITY WILL BE HANDLED THROUGH A PROPOSED STORMWATER MANAGEMENT BASIN ON-SITE.

CALCULATIONS: ALL STORM SEWER CALCULATIONS HAVE BEEN SUBMITTED TO COUNTY AND STATE OFFICIALS FOR REVIEW.

MAINTENANCE OF EROSION AND SEDIMENT CONTROL MEASURES:

SILT FENCE: INSPECT AFTER EACH RAINFALL EVENT. REMOVE SEDIMENT FROM SILT FENCE WHEN IT REACHES ONE-HALF THE HEIGHT OF THE BARRIER. REPAIR ANY TORN FENCE PROMPTLY.
CULVERT INLET PROTECTION: INSPECT AFTER EACH RAINFALL EVENT. REMOVE SEDIMENT FROM SILT FENCE WHEN IT REACHES ONE-HALF THE HEIGHT OF THE BARRIER. REPAIR ANY TORN FENCE PROMPTLY.
CONSTRUCTION ENTRANCE: TOP DRESS WITH ADDITIONAL STONE OR WASH AND REWORK EXISTING STONE AS NEEDED TO PREVENT MUD FROM BEING TRACKED OFF THE SITE. ALL MATERIALS SPILLED, DROPPED, WASHED, OR TRACKED FROM VEHICLES ONTO ROADWAYS OR INTO STORM DRAINS MUST BE REMOVED IMMEDIATELY.
INLET PROTECTION: INSPECT AFTER EACH RAIN EVENT AND REPAIR AS NEEDED. SEDIMENT SHALL BE REMOVED AND THE TRAP RESTORED TO ITS ORIGINAL DIMENSIONS WHEN SEDIMENT HAS ACCUMULATED TO ONE HALF THE DESIGN DEPTH OF THE TRAP. REMOVED SEDIMENT SHALL BE DEPOSITED IN A SUITABLE AREA AND IN SUCH A MANNER THAT IT WILL NOT ERODE. STRUCTURES SHALL BE REMOVED AND THE AREA STABILIZED WHEN THE REMAINING DRAINAGE AREA HAS BEEN PROPERLY STABILIZED.
TEMPORARY DIVERSION DIKE: INSPECT AFTER EACH RAINFALL EVENT AND REPAIR AS NEEDED. DAMAGES CAUSED BY CONSTRUCTION TRAFFIC OR OTHER ACTIVITY SHALL BE REPAIRED BEFORE THE END OF EACH WORKING DAY.
TEMPORARY SEDIMENT TRAP: CHECK REGULARLY TO ENSURE THAT THEY ARE STRUCTURALLY SOUND AND HAVE NOT BEEN DAMAGED. THE HEIGHT OF THE STONE OUTLET SHALL BE CHECKED TO ENSURE THAT IT IS AT LEAST 1 FOOT BELOW THE TOP OF THE EMBANKMENT. SEDIMENT SHALL BE REMOVED AND THE TRAP RESTORED TO ITS ORIGINAL DIMENSIONS WHEN THE SEDIMENT HAS ACCUMULATED TO ONE HALF OF THE DESIGN VOLUME OF THE WET STORAGE. EXCAVATED SEDIMENT SHALL BE USED AS FILL ON SITE OR REMOVED TO AN APPROVED OFF-SITE LOCATION. FILTER STONE SHALL BE REGULARLY CHECKED TO ENSURE THAT FILTRATION IS MAINTAINED. STONE CHOKED WITH SEDIMENT SHALL BE REMOVED AND CLEANED OR REPAIRED.

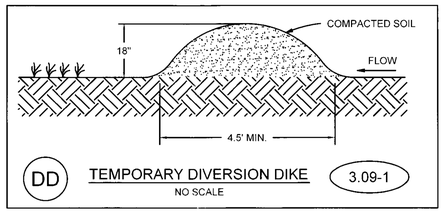

DD TEMPORARY DIVERSION DIKE 3.09-1
NO SCALE

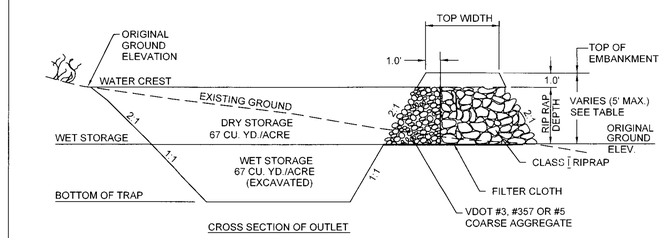

ST TEMPORARY SEDIMENT TRAP 3.13-2
NO SCALE

TEMPORARY SEDIMENT TRAP SCHEDULE

ST. NO.	DRAINAGE AREA (ACRES.)	VOLUME REQUIRED (CU. YD.)	VOLUME PROVIDED (CU. YD.)	LENGTH OF VDOT RIP RAP REQUIRED (FT)	SEDIMENT TRAP BOTTOM DIMENSIONS (EXCAVATED) LENGTH (FT)	WIDTH (FT)	WET STORAGE DEPTH (4' MAX.) (FT)	RIP RAP & DRY STORAGE DEPTH (FT)	TOTAL WET & DRY STORAGE DEPTH (FT)	TOTAL HEIGHT OF EMBANKMENT (5' MAX.) (FT)	TOP WIDTH OF EMBANKMENT (FT)	SEDIMENT TRAP ELEVATIONS BOTTOM	TOP OF WET VOLUME	TOP OF DRY VOLUME	TOP OF EMBANKMENT
1	1.79	240	258	10.74	51	21	2.25	1.75	4	2.75	2.5	75.00	77.25	79.00	80.00
2	0.64	86	99	3.84	40	20	2.00	1.5	3.5	2.5	2.5	74.50	76.50	78.00	79.00

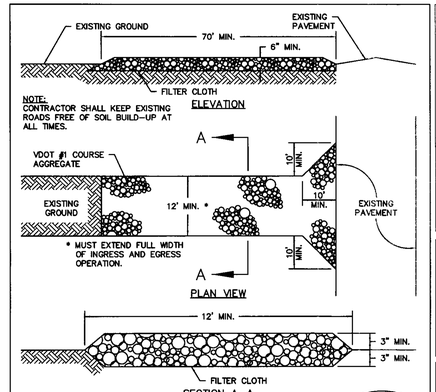

CE STONE CONSTRUCTION ENTRANCE 3.02-1
NO SCALE
SOURCE: VIRGINIA EROSION AND SEDIMENT CONTROL HANDBOOK, 3RD ED., 1993 PLATE: 3.02-1
CONTRACTOR SHALL KEEP EXISTING ROADS FREE OF SOIL BUILD-UP AT ALL TIMES.

EROSION CONTROL SEQUENCE OF EVENTS

1. NOTIFY DIANE COOK OF THE PRINCE GEORGE COUNTY DEPT. OF INSPECTIONS AND CODE COMPLIANCE AT (804)722-8659 FOR A PRE-CONSTRUCTION MEETING AND ON-SITE VISIT ONE WEEK PRIOR TO BEGINNING CONSTRUCTION.
2. INSTALL CONSTRUCTION ENTRANCE, CULVERT INLET PROTECTION, SILT FENCE, DIVERSION DIKES, AND SEDIMENT TRAP AS PER PLAN. STABILIZE IMMEDIATELY AFTER INSTALLATION.
3. BEGIN ROUGH GRADING SITE AND INSTALL UTILITIES, INCLUDING STORM SEWER SYSTEM. INSTALL INLET PROTECTION ON DROP INLETS AS PER PLAN. INSTALL RAINTANK PER MANUFACTURERS INSTRUCTIONS AFTER UPSTREAM AREAS HAVE BEEN STABILIZED.
4. BEGIN BUILDING CONSTRUCTION AND INSTALL CURB AND GUTTER.
5. FINE GRADE SITE AS PER PLANS AND INSTALL PAVEMENT. SEED DENUDED AREAS AS SOON AS POSSIBLE AND MULCH ALL DISTURBED AREAS. SEEDING AND MULCHING SHALL BE PER VIRGINIA REGULATION 9VAC25-840-40 MS-3 AND EROSION CONTROL GENERAL NOTE 11.
6. CONTINUING MAINTENANCE PRACTICES SHALL BE PERFORMED TO ENSURE PROTECTION OF DOWNSTREAM PROPERTIES.
7. NO EROSION CONTROL DEVICE SHALL BE REMOVED UNTIL AN ADEQUATE STAND OF GRASS HAS BEEN OBTAINED. EC MEASURES SHALL BE REMOVED IN ACCORDANCE WITH VIRGINIA REGULATION 9VAC25-840-40 MS-18.

NOTE: ALL VEGETATIVE AND STRUCTURAL EROSION AND SEDIMENT CONTROL MEASURES SHOWN ON THE PLAN ARE TO BE CONSTRUCTED, MAINTAINED, AND REMOVED IN ACCORDANCE WITH THE CURRENT EDITION OF THE VIRGINIA EROSION AND SEDIMENT CONTROL HANDBOOK AND VIRGINIA REGULATION 9VAC25-840.

INFILTRATION SITE NOTES

- INSTALL SAFETY FENCE AROUND THE INFILTRATION AREA TO AVOID EXCESSIVE COMPACTION BY PREVENTING CONSTRUCTION EQUIPMENT AND VEHICLES FROM TRAVELING OVER THE PROPOSED LOCATION OF THE INFILTRATION PRACTICE.
- KEEP THE INFILTRATION PRACTICE "OFF-LINE" UNTIL UPSTREAM AREAS ARE STABILIZED. PREVENT SEDIMENT FROM ENTERING THE INFILTRATION SITE BY USING SILT FENCE, DIVERSION BERMS, OR OTHER MEANS.
- INFILTRATION PRACTICE SITES SHALL NOT SERVE AS THE SITES FOR TEMPORARY SEDIMENT CONTROL DEVICES (E.G., SEDIMENT TRAPS, ETC.) DURING CONSTRUCTION.
- UPSTREAM INLETS SHALL HAVE ADEQUATE INLET PROTECTION PRIOR TO CONNECTING TO AN INFILTRATION PRACTICE, AS VERIFIED BY THE LOCAL EROSION AND SEDIMENT CONTROL INSPECTOR/PROGRAM.

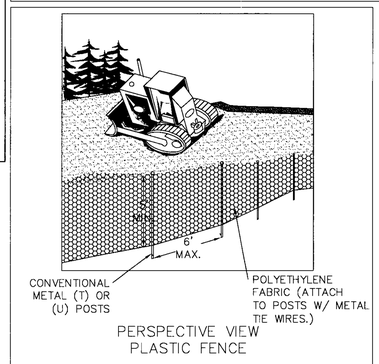

SAF SAFETY FENCE 3.01-1
NO SCALE

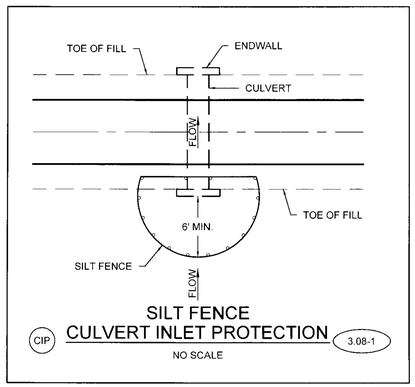

CIP SILT FENCE CULVERT INLET PROTECTION 3.08-1
NO SCALE

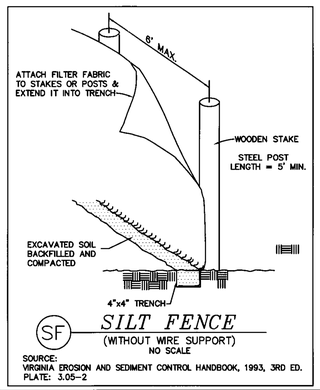

SF SILT FENCE (WITHOUT WIRE SUPPORT)
NO SCALE
SOURCE: VIRGINIA EROSION AND SEDIMENT CONTROL HANDBOOK, 1993, 3RD ED. PLATE: 3.05-2

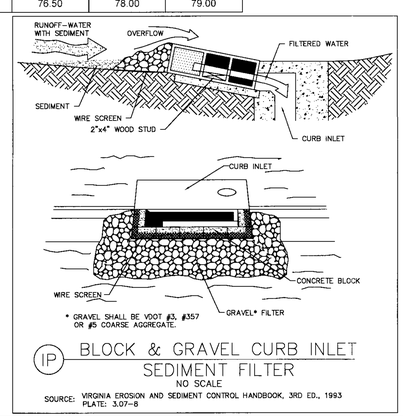

IP BLOCK & GRAVEL CURB INLET SEDIMENT FILTER
NO SCALE
SOURCE: VIRGINIA EROSION AND SEDIMENT CONTROL HANDBOOK, 3RD ED., 1993 PLATE: 3.07-8

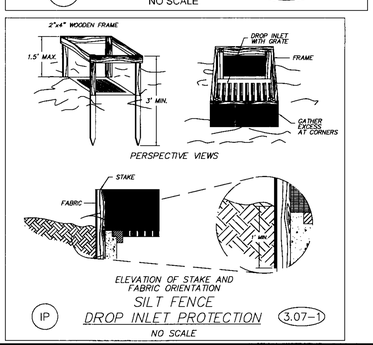

IP SILT FENCE DROP INLET PROTECTION 3.07-1
NO SCALE

COMMONWEALTH OF VIRGINIA
BENJAMIN S. MCMILLAN
Lic. No. 048542
4/1/14
PROFESSIONAL ENGINEER

THIS DRAWING PREPARED AT THE
TRI-CITIES OFFICE
4701 Owens Way, Suite 900 | Prince George, VA 23875
TEL 804.458.8685 FAX 804.458.1511 www.timmons.com

DATE	REVISION DESCRIPTION
2-21-14	COUNTY REVIEW COMMENTS
4-1-14	COUNTY REVIEW COMMENTS

YOUR VISION ACHIEVED THROUGH OURS.

DATE	9 DEC 2013
DRAWN BY	M. ANDERSON
DESIGNED BY	B. MCMILLAN
CHECKED BY	K. HALPAUS
SCALE	NONE
JOB NO.	34597
SHEET NO.	C1.3

TIMMONS GROUP

JEFFERSON PARK OFFICE COMPLEX

BLAND DISTRICT - PRINCE GEORGE COUNTY - VIRGINIA

EROSION CONTROL NOTES AND DETAILS

These plans and associated documents are the exclusive property of TIMMONS GROUP and may not be reproduced in whole or in part and shall not be used for any purpose whatsoever, inclusive, but not limited to construction, bidding, and/or construction staking without the express written consent of TIMMONS GROUP.

R:\16963459_Jefferson_Park_Office_Complex\DWG\Sheet\CD\34597C-1-NTD1.dwg | Plotted on 4/4/2014 12:28 PM | by Colin Brown