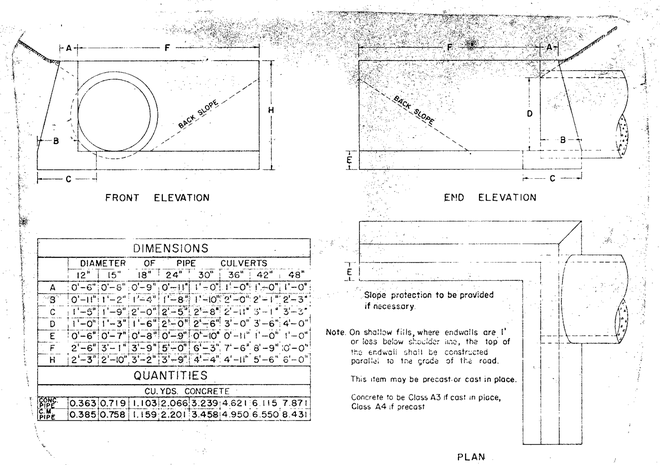

DIMENSIONS	DIAMETER OF PIPE CULVERTS							
	12"	15"	18"	24"	30"	36"	42"	48"
A	0'-6"	0'-8"	0'-9"	0'-11"	1'-0"	1'-0"	1'-0"	1'-0"
B	0'-11"	1'-2"	1'-4"	1'-8"	1'-10"	2'-0"	2'-1"	2'-3"
C	1'-5"	1'-9"	2'-0"	2'-5"	2'-8"	2'-11"	3'-1"	3'-3"
D	1'-0"	1'-3"	1'-6"	2'-0"	2'-6"	3'-0"	3'-6"	4'-0"
E	0'-6"	0'-7"	0'-8"	0'-9"	0'-10"	0'-11"	1'-0"	1'-0"
F	2'-6"	3'-1"	3'-9"	5'-0"	6'-3"	7'-6"	8'-9"	10'-0"
H	2'-3"	2'-10"	3'-2"	3'-9"	4'-4"	4'-11"	5'-6"	6'-0"

QUANTITIES	CU. YDS. CONCRETE							
CONC. PIPE	0.363	0.719	1.103	2.066	3.239	4.621	6.115	7.871
C.M. PIPE	0.385	0.758	1.159	2.201	3.458	4.950	6.550	8.431

L. ENDWALLS FOR 12"-48" PIPE

VIRGINIA
DEPARTMENT OF HIGHWAYS

EW-8

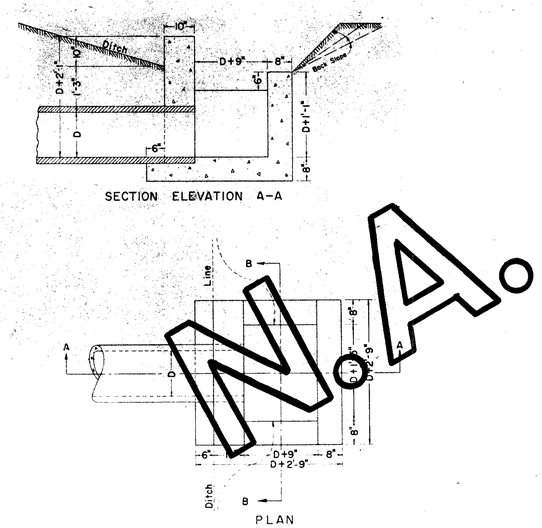

N.A.

STANDARD INTAKE TYPE "A" FOR 15"-24" PIPE

IT-1

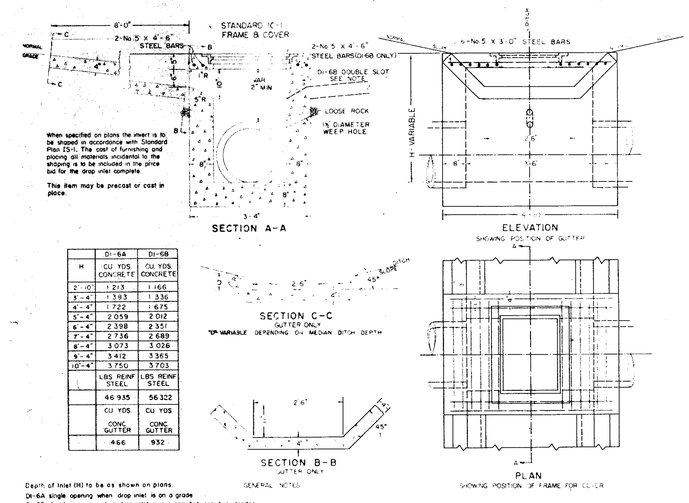

H	DI-6A	DI-6B
	CU YDS CONCRETE	CU YDS CONCRETE
2'-10"	1.213	1.166
3'-4"	1.383	1.336
4'-4"	1.722	1.675
5'-4"	2.059	2.012
6'-4"	2.398	2.351
7'-4"	2.736	2.689
8'-4"	3.073	3.026
9'-4"	3.412	3.365
10'-4"	3.750	3.703
	LBS REINF STEEL	LBS REINF STEEL
	46.935	56.322
	CU YDS CONC GUTTER	CU YDS CONC GUTTER
	4.66	9.32

Depth of inlet (H) to be as shown on plans.
DI-6A single opening when drop inlet is on a grade
DI-6B double opening when drop inlet is in a sag between two grades.
Class A3 Concrete to be used if cast in place, Class A4 if precast
Standard IC-1 cover and frame to be included in price bid for inlet.

GENERAL NOTES

Median ditch to be warped to tie smoothly into inlet gutter.
Paved median ditches are to be transitioned to meet inlet gutter as shown in Standard PG-1.

STANDARD MEDIAN DROP INLET

VIRGINIA
DEPARTMENT OF HIGHWAYS

DI-6A-6B

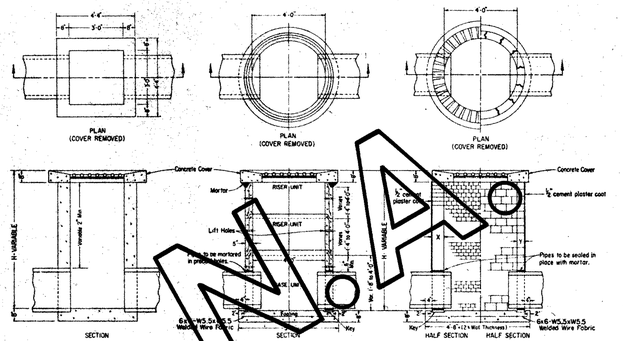

Class A-3 concrete to be used.
Maximum depth (H) to be 12'-0".

Pipe Size	12"	15"	18"	24"	30"	36"
Minimum Depth H	2'-0"	2'-3¾"	2'-6½"	3'-1"	3'-7½"	4'-2"
Cu. Yds. Conc.	.947	1.045	1.143	1.339	1.535	1.731

Increment per foot of additional depth (H)=0.362 cu. yds.

Class A-3 concrete to be used.
All base and riser units are to be in accordance with the requirements of AASHO designation M-199 except that minimum wall thickness is to be 5". Reinforced concrete footing may be precast or cast in place.
Two 2" diameter holes to be provided in each base and riser unit. Holes are to be located above the center of gravity of each unit with centers 180° apart. Two lifting hooks of fabricators design to be provided in precast footing. The contractor will furnish the fabricator with the angles between center lines, the invert elevations, and the size of all pipes to enter the inlet. In no case shall the holes for pipe exceed 60% of the full sectional area in any single unit. A minimum of 1'-6" along the outer circumference is to remain between the extremities of holes for adjacent pipes in any single unit.
Lift holes are to be sealed with mortar after installation of units.
Base unit must be 4'-0" in height for use with 30" or 36" pipe.

Concrete block shall conform to the requirements of ASTM designation C-139. Brick shall be in accordance with the Specifications.
Reinforced concrete footing may be precast or cast in place. Two lifting hooks of fabricators design to be provided in precast footing.

Dim.	Depth	Approx. No. Bricks/Ft.
8"	D to 12'	200
12"	D to 16'	300
16"	16' to 25'	400

Dim.	Depth	Approx. No. Blocks/Ft.
5"	D to 12'	10
5"	12' to 25'	20

GENERAL NOTES

DI-7A - Single gutter when drop inlet is on a grade.
DI-7B - Double gutter when drop inlet is in a sag between two grades.
Paved gutter and median inlet complete in place is to include concrete cover with grate, footing where required, and gutters.
The type of inlet detailed hereon to be constructed will be at the option of the contractor.

When specified on plans the invert is to be shaped in accordance with STD IS-1. The cost of furnishing and placing all materials incidental to the shaping is to be included in the price bid per drop inlet.

Increments shown are for inlets without pipes. Pipe displacements must be deducted to obtain true quantities.
Paved ditches are to be transitioned to meet inlet gutter as shown in STD. PG-1.
Footing may be round or square in shape. Key is to be 1' deep x wall thickness deep.
Depth of inlet (H) is to be as shown on plans.

STANDARD MEDIAN DROP INLET
FOR USE WITH 12" TO 36" PIPES

VIRGINIA DEPARTMENT OF HIGHWAYS

DI-7A-7B

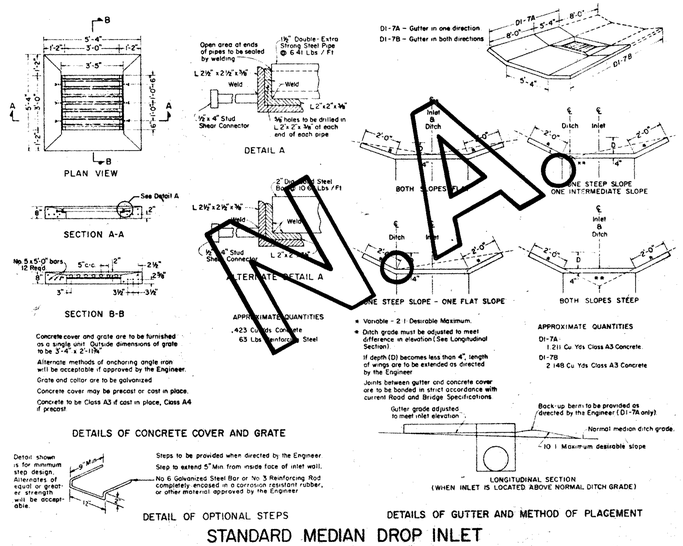

N.A.

Concrete cover and grate are to be furnished as a single unit. Outside dimensions of grate to be 3'-4" x 2'-11¾".
Alternate methods of anchoring angle iron will be acceptable if approved by the Engineer.
Grate and collar are to be galvanized.
Concrete cover may be precast or cast in place.
Concrete to be Class A3 if cast in place, Class A4 if precast.

Steps to be provided when directed by the Engineer.
Step to extend 5" Min. from inside face of inlet wall.
No. 6 Galvanized Steel Bar or No. 3 Reinforcing Rod completely encased in a corrosion resistant rubber, or other material approved by the Engineer.

* Variable - 2:1 Desirable Maximum.
* Ditch grade must be adjusted to meet difference in elevation (See Longitudinal Section).

If depth (D) becomes less than 4', length of wings are to be extended as directed by the Engineer.
Joints between gutter and concrete cover are to be bonded in strict accordance with current Road and Bridge Specifications.
Gutter grade adjusted to meet inlet elevation.

STANDARD MEDIAN DROP INLET
FOR USE WITH 12" TO 36" PIPES

VIRGINIA
DEPARTMENT OF HIGHWAYS

DI-7A-7B

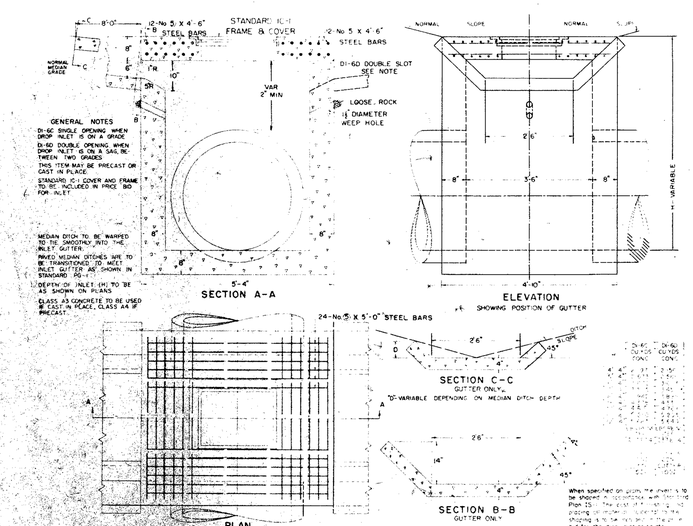

GENERAL NOTES

DI-6C SINGLE OPENING WHEN DROP INLET IS ON A GRADE.
DI-6D DOUBLE OPENING WHEN DROP INLET IS ON A SAG BETWEEN TWO GRADES.
THIS ITEM MAY BE PRECAST OR CAST IN PLACE.
STANDARD IC-1 COVER AND FRAME TO BE INCLUDED IN PRICE BID FOR INLET.
MEDIAN DITCH TO BE WARPED TO TIE SMOOTHLY INTO THE INLET GUTTER.
PAVED MEDIAN DITCHES ARE TO BE TRANSITIONED TO MEET INLET GUTTER AS SHOWN IN STANDARD PG-1.
DEPTH OF INLET (H) TO BE AS SHOWN ON PLANS.
CLASS A3 CONCRETE TO BE USED IF CAST IN PLACE, CLASS A4 IF PRECAST.

When specified on plans the invert is to be shaped in accordance with STD. Plan IS-1. The cost of furnishing and placing all materials incidental to the shaping is to be included in the price bid for the drop inlet complete.

STANDARD MEDIAN DROP INLET

VIRGINIA
DEPARTMENT OF HIGHWAYS

DI-6C-6D

REGISTERED PROFESSIONAL ENGINEER — COMMONWEALTH OF VIRGINIA — H. P. McDOWELL, III — CERTIFICATE No. 8670

TALBOT & ASSOCIATES, Ltd.
ENGINEERS • PLANNERS • SURVEYORS
VIRGINIA BEACH, VIRGINIA

DESIGNED	DRAWN	CHECKED
T.A.	T.A.	A.D.S.
APPROVED	DATE	SCALE
WPM	4-5-76	NONE
PROJ. NO.	FILE NO.	
3049	2-1-37	9 of 10

JEFFERSON CIRCLE SUBDIVISION

DETAIL SHEET