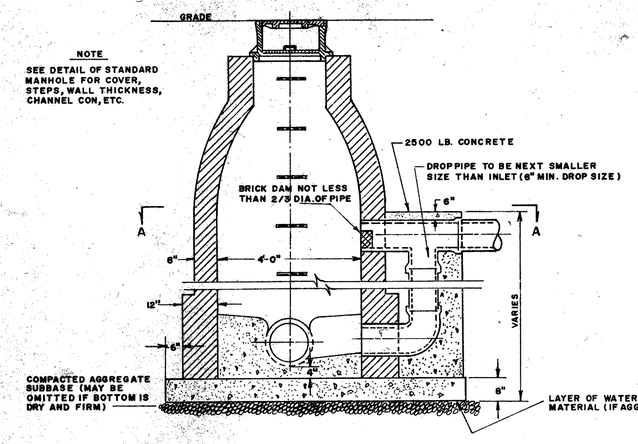

STANDARD DROP MANHOLE

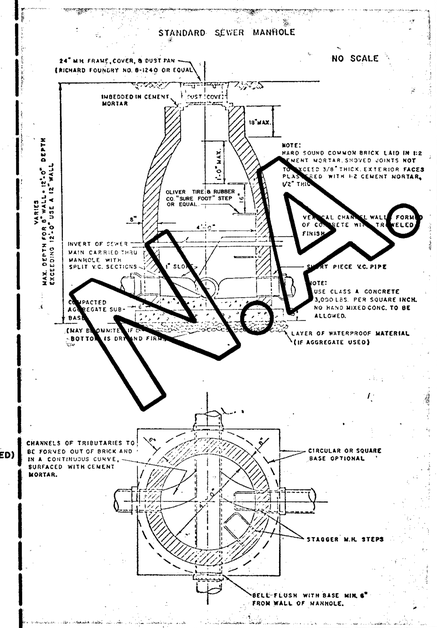

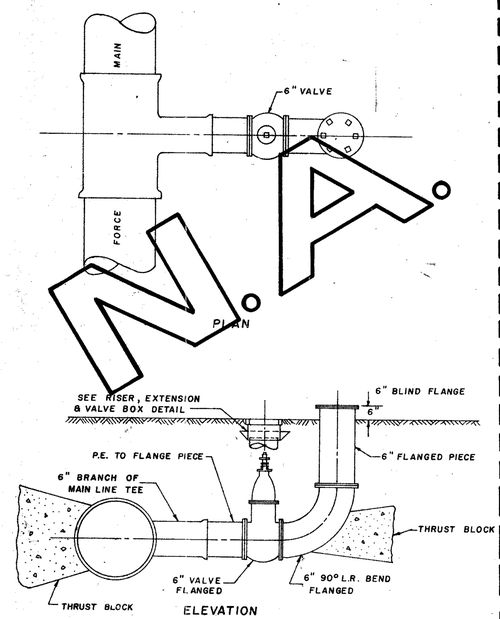

EMERGENCY PUMP CONNECTION

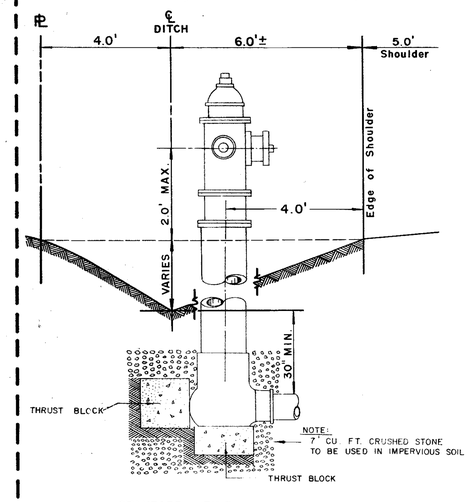

STANDARD FIRE HYDRANT SETTING

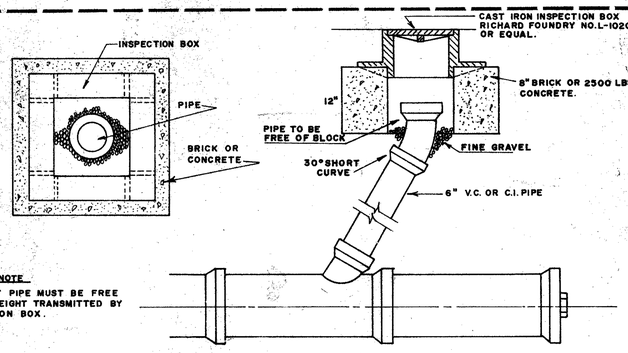

NOTE
CLEANOUT PIPE MUST BE FREE OF ANY WEIGHT TRANSMITTED BY INSPECTION BOX.

CLEANOUT

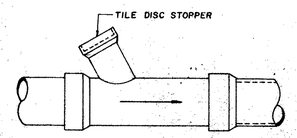

6" X "D" Y BRANCH

NOTE: ALL Y's TO BE LOCATED IN THE FIELD, ALL STUBBED TO THE REAR OF THE CURBLINE

WHERE SEWER LINES ARE OVER 7' DEEP HOUSE CONNECTIONS ARE TO BE MADE TO MANHOLES OR TO RISERS SET BETWEEN MANHOLES.

RISER EXTENSION & VALVE BOX DETAIL

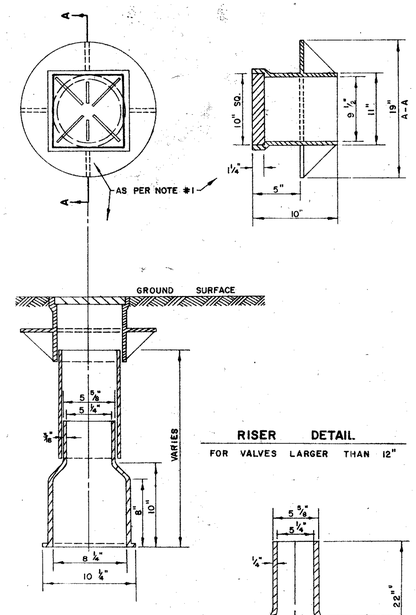

RISER DETAIL
FOR VALVES LARGER THAN 12"

NOTE:
1. C.I. VALVE BOX TO BE RICHARD MACHINE WORKS, NORFOLK, VA. PATTERN L-1001 OR EQUAL.
2. EXTENSION PIECE TO BE 8" CLASS 150 C.I. PIPE.
3. C.I. RISER TO BE RICHARD MACHINE WORKS, NORFOLK, VA. PATTERN VB-42-1 (SECTION B ONLY) OR EQUAL.

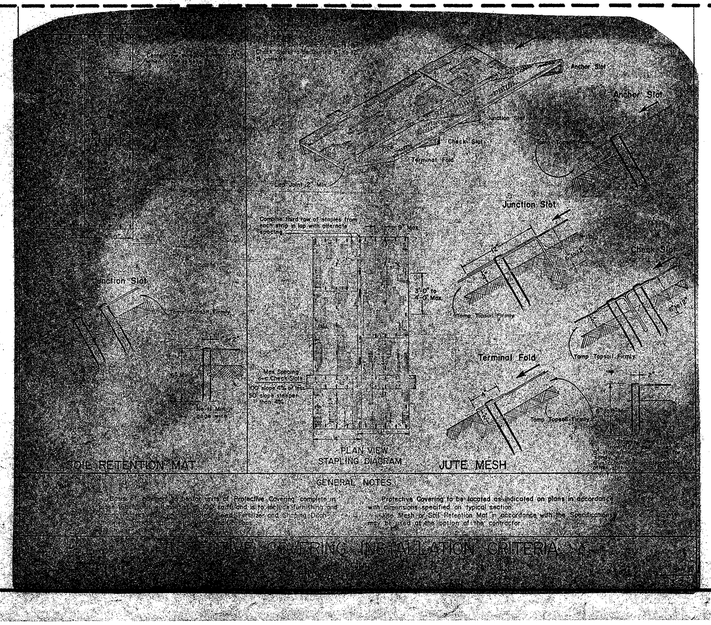

"U" TYPE ENDWALL

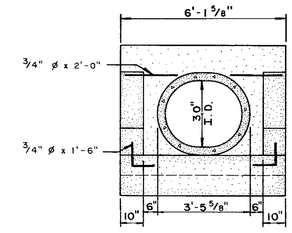

FRONT ELEVATION

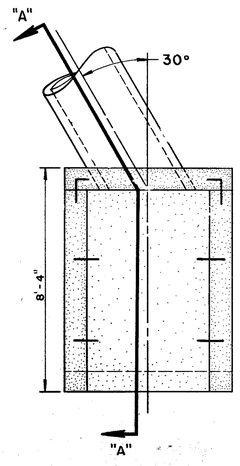

PLAN

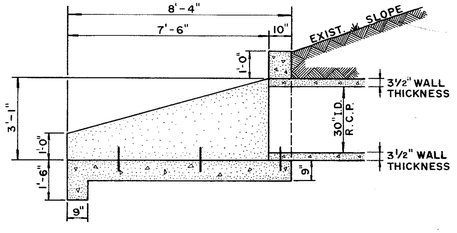

SECTION "A" - "A"

REVISED 5/10/76 ADDED DROP MANHOLE DETAIL.

COMMONWEALTH OF VIRGINIA
W. P. McDOWELL, III
CERTIFICATE No. 5670
REGISTERED PROFESSIONAL ENGINEER

TALBOT & ASSOCIATES, Ltd.
ENGINEERS • PLANNERS • SURVEYORS
VIRGINIA BEACH, VIRGINIA

DESIGNED	DRAWN	CHECKED
T.A.	T.A.	A.D.S.
APPROVED	DATE	SCALE
WPM	4-5-76	NONE
PROJ. NO. 3049	FILE NO. E-1-37	7 of 10

JEFFERSON CIRCLE SUBDIVISION

DETAIL SHEET