GENERAL NOTES

1. Prior to construction within any existing public right of way, the contractor shall obtain a permit from the office of the Virginia Department of Highways and Transportation.

2. Prior to construction or excavation, the contractor shall assume the responsibility of locating any underground utilities (public or private) that may exist and cross through the area of construction, that are not shown on these plans.

3. The contractor shall be responsible for repairing at his expense any existing utilities damaged during construction.

4. The contractor shall be responsible for replacing with matching materials any driveways, walks, curbs, etc., that must be cut or are damaged during construction.

5. The contractor shall provide temporary drainage during construction in areas that may be damaged by flooding.

6. The contractor shall be required to excavate below plan grade any materials which are unsuitable for foundations, subgrades, or other roadway purposes within the limits of street construction and back fill these areas with an approved material. The extent of undercutting and backfilling shall be determined by the Virginia Department of Highways and Transportation.

7. All materials and construction shall conform with current standards and specifications of the Virginia Department of Highways and Transportation.

8. All concrete shall be Class 'A-3' air-entrained (3,000 p.s.i.) Class 'A-4' concrete shall be used for precast drainage structures.

9. All storm sewer pipes and inlets shall be cleaned of debris and eroded material at last stages of construction.

10. All storm sewer pipe shall be concrete tongue and groove. Pipes not subject to traffic loading can be nonreinforced pipe and shall conform to the specifications for concrete sewer pipe A.A.S.H.O. designation M 170 with the modification that all pipe shall be manufactured with 4,000 p.s.i. concrete.

11. Embankments shall be made of approved material and shall be built in layers not exceeding eight (8) inches of loose material and compacted in accordance with the specifications of the Virginia Department of Highways and Transportation.

12. All slopes within rights of way are to be topsoiled and seeded in accordance with the specifications of the Virginia Department of Highways and Transportation not to exceed the maximums as follows, cut slope = 2:1, fill slope = 3:1.

13. All sanitary sewers and manholes shall be constructed in accordance with the standards and specifications and under the supervision and inspection of the Department of Utilities, Prince George County.

14. All sanitary sewers 8" in diameter and larger shall be ESVC except when:

    A. Cover is 30" or less
    B. Where clearance to other underground structures is 1' or less in which case ductile iron, Class II, shall be used with stainless steel banded neoprene joints, Fernco approved equal.
    C. Where otherwise shown on plans.

15. All laterals shall be heavy duty slip joint soil pipe.

16. All water mains shall be installed in accordance with the standards and specifications, and under the supervision and inspection of the Department of Utilities, Prince George County.

17. All earthwork to be accomplished prior to installation of water main.

18. Tie rods will be used on bends and fittings where water main is offset under storm drains or other utilities.

19. Water mains may be rolled under storm drains without fitting where the change in vertical curve is two feet or less.

20. No pipe 'fold-ins' will be used on water mains. Sleeves will be used in lieu of 'fold-ins'.

21. Virginia-American Water Company shall be notified 24 hours in advance of any excavation in proximity of its water distribution system.

22. Thrust blocks shall be installed at all bends of 22½° or greater.

23. All connections to existing water mains and installation of distribution systems are to be made by Virginia-American Water Company forces.

24. Separation of water mains and sewers

    A. Parallel Installation

        1. Normal conditions--water mains shall be laid at least 10 feet horizontally from any sanitary sewer, storm sewer or sewer manhole, whenever possible the distance shall be measured edge-to-edge.
        2. Unusual conditions--when local conditions prevent a horizontal separation of 10', a water main may be laid closer to a storm or sanitary sewer; provided that;

            a. The bottom of the water main is at least 18" above the top of the sewer.
            b. Where this vertical separation cannot be obtained the sewer shall be constructed of materials and with joints that are equivalent to water main standards of construction and shall be pressure tested to assure watertightness prior to backfilling.

    B. Crossings

        1. Normal conditions--water mains crossing house sewer or sanitary sewers shall be laid to provide a separation of at least 18 inches between the bottom of the water main and the top of the sewer, whenever possible.
        2. Unusual conditions--When local conditions prevent a vertical separation as described in B-1, the following construction shall be used:

            a. Sewers passing over or under water mains should be constructed of the materials described in A-2.
            b. Water mains passing under sewers shall, in addition, be protected by providing:

                1. A vertical separation of at least 18 inches between the bottom of the sewer and the top of water mains.
                2. Adequate structural support for the sewers to prevent excessive deflection of joints and settling on and breaking the water mains.
                3. That the length of water pipe be centered at the point of crossing so that the joints will be equidistant and as far as possible from the sewer.

            c. Sewer manholes--no water pipe shall pass through or come into contact with any part of a sewer or sewer manhole.

25. Sewer service laterals to include 4" c.i. pipe brought 6" above grade and fitted with clean out cover, such as "panella clean out", panella industries, Baltimore, Md. or approved equal.

26. Construction of all utilities shall conform to the requirements of the Virginia Department of Health.

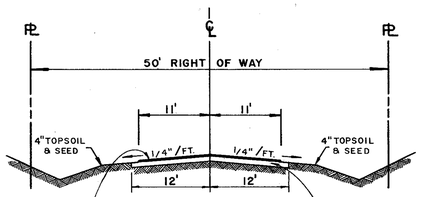

PAVEMENT DESIGN

1½" ASPHALTIC CONCRETE SURFACE (S-5)

6" COMPACTED AGGREGATE BASE TYPE I OR TYPE II

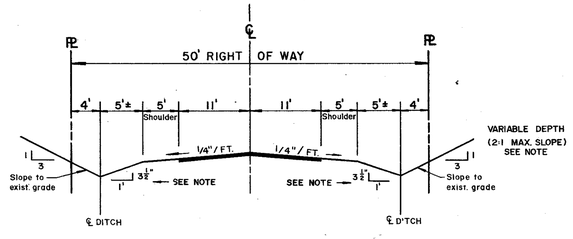

NOTES:

1. DITCH SLOPE MAY BE 2:1 AS DIRECTED BY THE ENGINEER IN AREAS WHERE LACK OF RIGHT OF WAY PREVENT THE USE OF THE STANDARD SLOPE.

2. DITCHES, EMBANKMENTS AND SHOULDERS ARE TO BE STABILIZED IMMEDIATELY AFTER CONSTRUCTION IS COMPLETE. TOPSOIL AND SEED SHALL BE APPLIED IN ACCORDANCE WITH SECTION 602 AND SECTION 604 OF THE VIRGINIA DEPARTMENT OF HIGHWAYS AND TRANSPORTATION ROAD AND BRIDGE SPECIFICATIONS.

PRECAST SEWER MANHOLE

(SHALLOW MANHOLE) FOR MANHOLES LESS THAN 5'-0" TO TOP OF ADJUSTMENT.

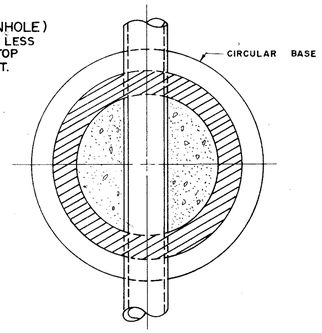

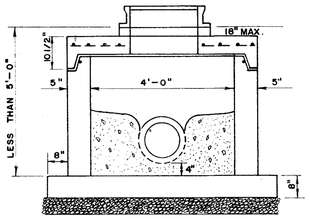

ALL OTHER CRITERIA TO BE THE SAME AS FOR STANDARD PRECAST SEWER MANHOLE

STANDARD PRECAST SEWER MANHOLE

REQUIREMENTS

1. MANHOLE SHALL MEET ALL REQUIREMENTS OF ASTM C-478-72.
2. O-RING JOINT SHALL MEET ALL REQUIREMENTS OF ASTM C-361. SPIGOT SHALL BE COMPATIBLE WITH QUINN MACH FORM & RING OR APPROVED EQUAL.
3. CONCRETE SHALL HAVE MIN. COMPRESSIVE STRENGTH OF 4,000 PS.I.
4. REINFORCING FABRIC SHALL MEET ASTM A-185-72
5. BASES SHALL BE EXTENDED MONOLITHIC TYPE.
6. MAX. HEIGHT FOR 48" M.H. SHALL NOT EXCEED 12 FT. OVER 12 FT. SHALL BE 60" M.H. UP TO 6 FT.
7. ALL MANHOLES SHALL RECEIVE INSIDE APPLICATION OF SIKAGARD HI-BILT OR APPROVED EQUAL APPLIED ACCORDING TO MANUFACTURERS SPECS.
8. M.H. STEPS SHALL BE OLIVER "SURE STEP" OR APPROVED EQUAL & SHALL BE CAST-IN-PLACE.
9. STANDARD INVERT ELEV. OF NO GREATER THAN 1 FT. DIFFERENCE SHOULD BE DESIGN CRITERIA. IF GREATER THAN 2 FT., M.H. MUST BE 60" DIA. INSIDE DROP CONNECTION.
10. CONTRACTOR MUST USE STUBS OF APPROVED PIPE IN & OUT OF M.H. NOT TO EXCEED WIDTH OF EXTENDED BASE OF M.H.

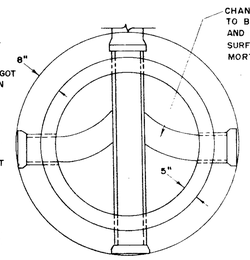

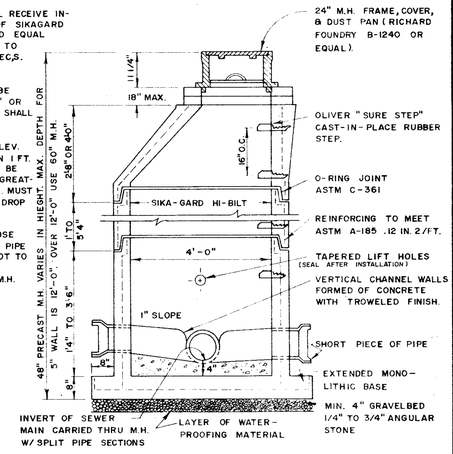

NOTES

1. JOINT DESIGN AND GASKET MEET ASTM C-361-72 AND SHALL CONFORM TO QUINN MFG SPIGOT RING OR APPROVED EQUAL.
2. REINFORCING DESIGN MEETS ASTM A-185-64.

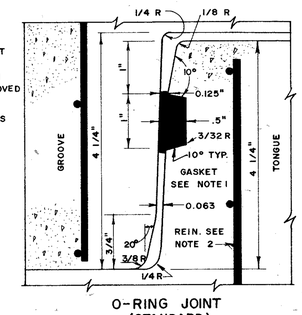

O-RING JOINT (STANDARD)

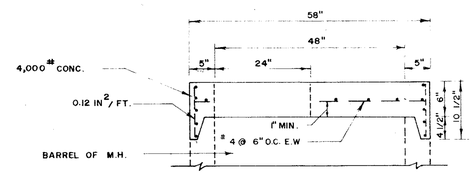

FLATTOP SECTION A-A

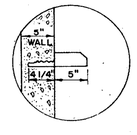

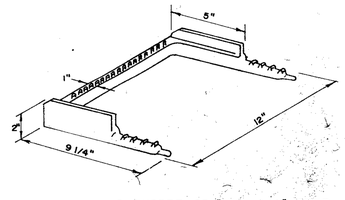

OLIVER TIRE & RUBBER CO. "sure foot" STEP

STEP IS MADE OF NO. 4 REINFORCING ROD COMPLETELY ENCASED IN A CORROSION RESISTANT RUBBER.

THESE STEPS ARE CAST-IN-PLACE. THE STEP IS POURED INTEGRALLY WITH THE MANHOLE SECTION & IS NOT MORTARED OR GROUTED IN LATER.

REVISED PAVEMENT AND BASE WIDTH 12/27/76

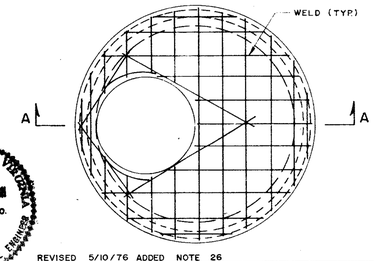

COMMONWEALTH OF VIRGINIA
W. P. McDOWELL, III
CERTIFICATE No. 5670
REGISTERED PROFESSIONAL ENGINEER

REVISED 5/10/76 ADDED NOTE 26

TALBOT & ASSOCIATES, Ltd.
ENGINEERS • PLANNERS • SURVEYORS
VIRGINIA BEACH, VIRGINIA

DESIGNED T.A.	DRAWN T.A.	CHECKED A.D.S
APPROVED WPM	DATE 4-5-76	SCALE NONE
PROJ. NO. 3049	FILE NO. 12-1-37	10 OF 10

JEFFERSON CIRCLE SUBDIVISION

DETAIL SHEET