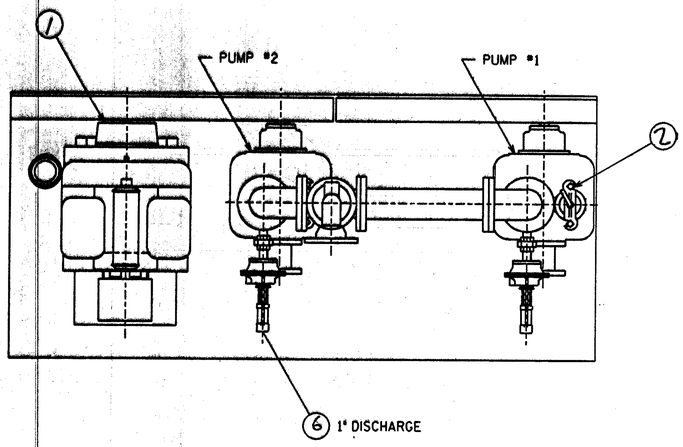

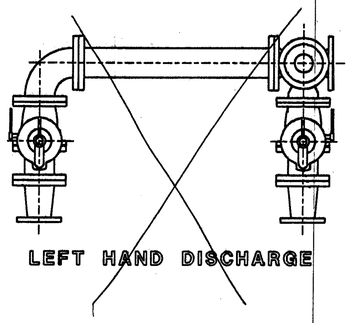

ITEM	DESCRIPTION	MATERIAL & SIZE
1	MOTOR	CAST IRON
2	PUMP	CAST IRON T4A3-B
3	ENGINE (WISCONSIN)	MODEL
4	DISCHARGE ELBOW 90°	CAST IRON
5	DISCHARGE PLUG VALVE	CAST IRON 3-WAY
6	AIR RELEASE VALVE	CAST IRON 1" (SHIPPED LOOSE)
7	DISCHARGE CHECK VALVE	CAST IRON
8	BELT GUARD ASSY	STEEL
9	PUMP & MOTOR BASE ASSY	STEEL

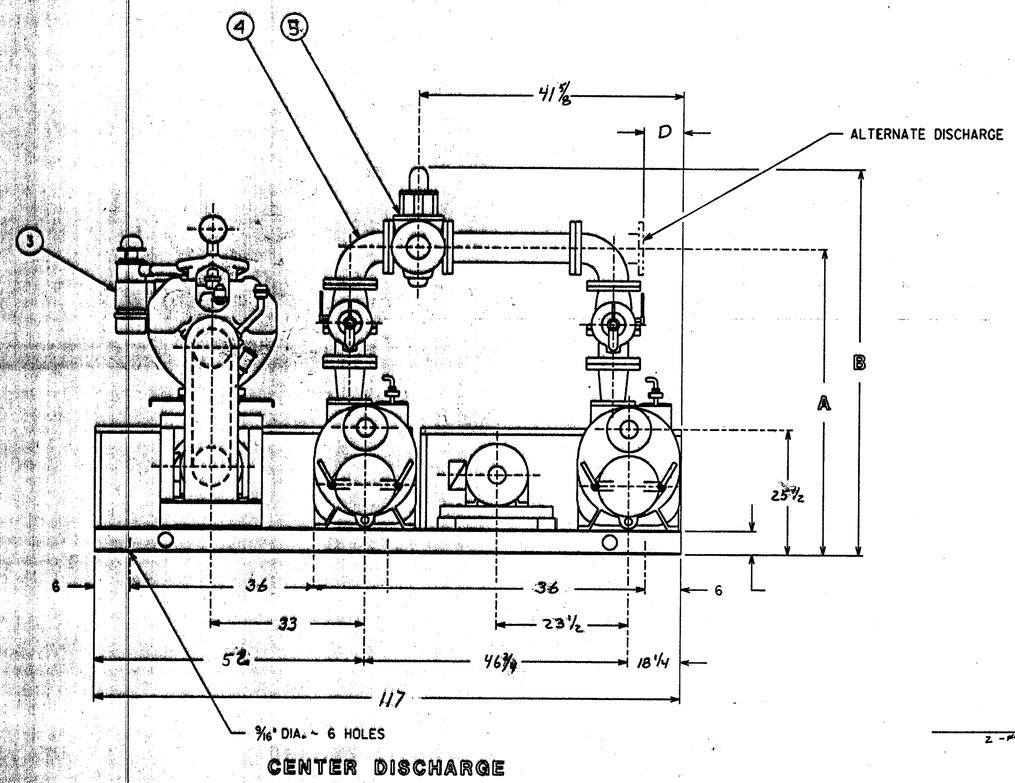

CENTER DISCHARGE

VALVE	L
4"	6 1/2"
6"	8"

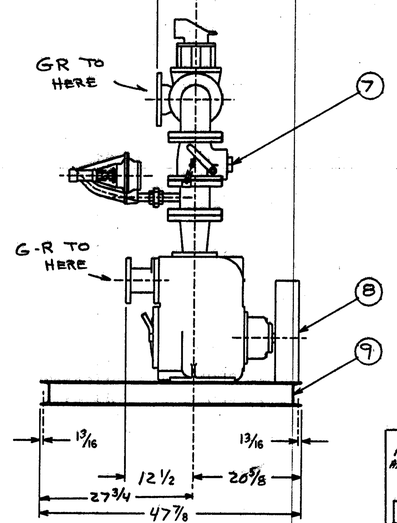

CENTER DISCHARGE					
PLUMBING			A	B	D
SUCT.	DISCH.	HDR.			
4"	4"	4"	54 3/4"	68 3/8"	X
4"	4"	6"	56 1/4"	71 1/8"	

LEFT HAND DISCHARGE					
PLUMBING			A	B	C
SUCT.	DISCH.	HDR.			
4"	4"	4"	54 3/4"	59 1/4"	72 5/8
4"	4"	6"	65 1/4"	70 3/4"	73 1/8

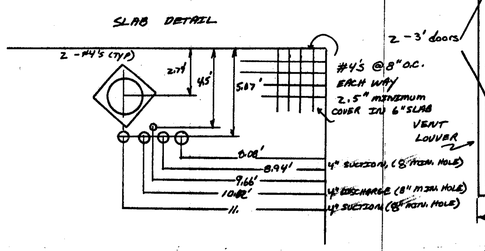

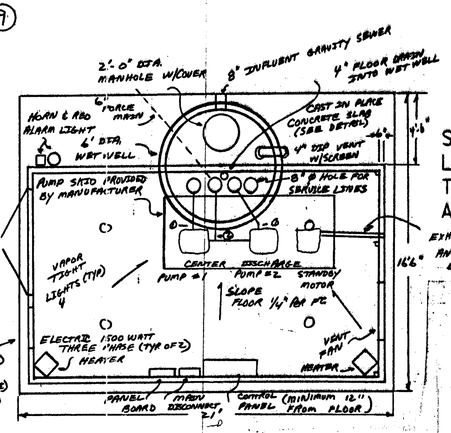

STANDBY
LEFT HAND DRIVE UNIT
T4A3-B, 4" X 4" X 4"
AS SHOWN

EXHAUST MUFFLER TO OUTSIDE
ANCHORS FOR BLDG. PROVIDED BY BLDG. MANUFACTURER.

PRINCE GEORGE COUNTY, VIRGINIA	
I-295 INDUSTRIAL PARK PUMP STATION	
SCALE: AS SHOWN	DRAWN BY: S.E. McBRIDE
DATE: AUGUST 10, 1998	APPROVED BY: S.E.M.
PRINCE GEORGE COUNTY ENGINEERING OFFICE	PAGE 1 OF 1