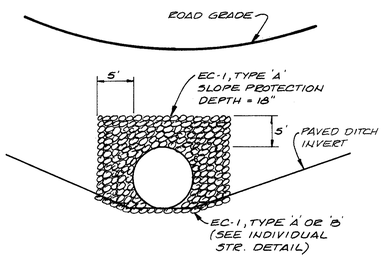

PROFILE VIEW

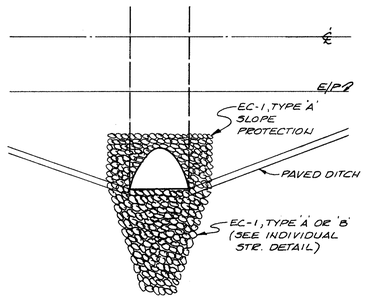

PLAN VIEW

ALTERNATE DESIGN OF INLET AND OUTLET PROTECTION FOR STRUCTURES 1, 7 & 8

N.T.S.

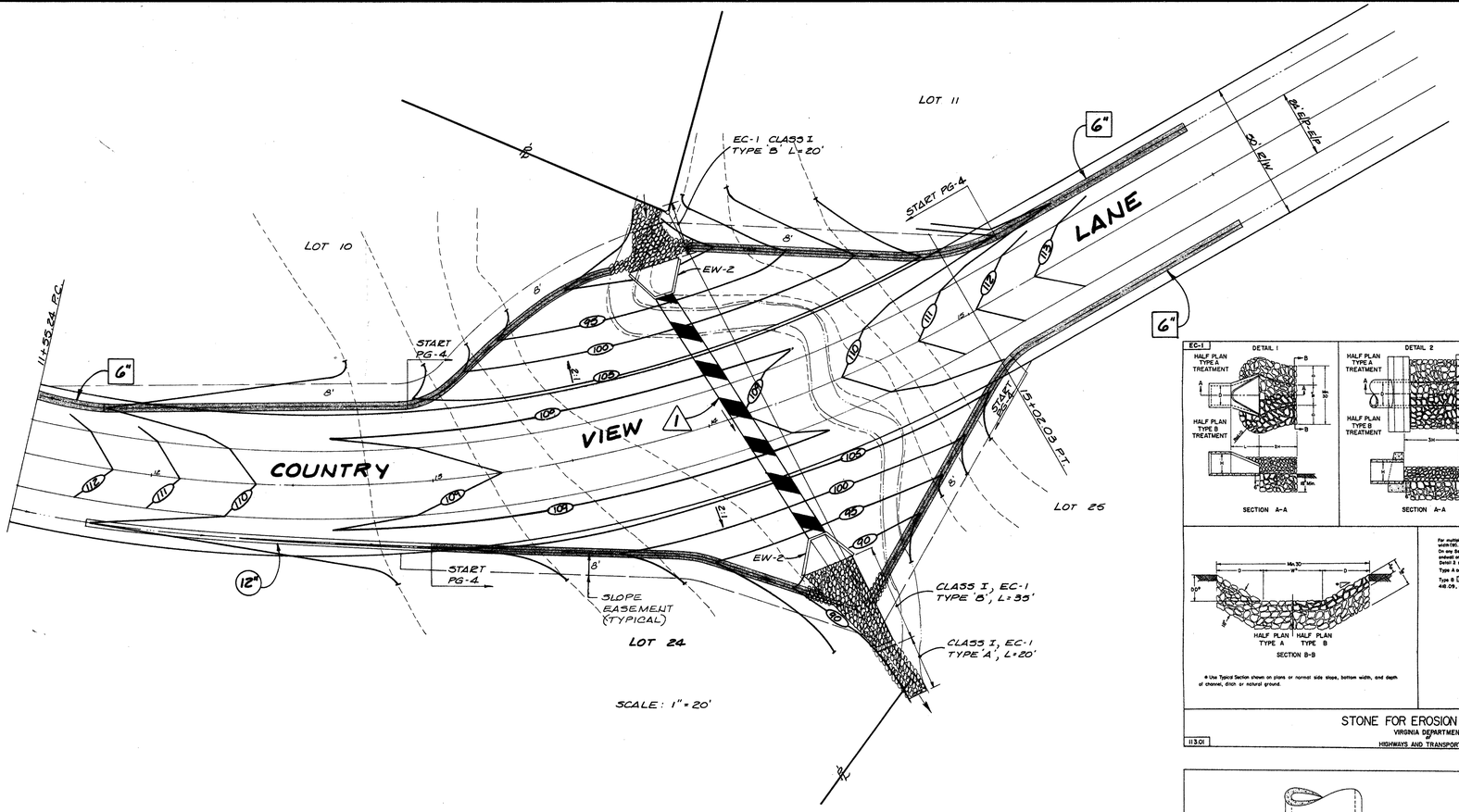

SCALE: 1" = 20'

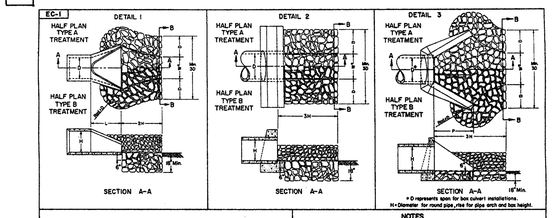

NOTES

For multiple line installations Dimension D is to govern the protection outside the channel width (W).

On any Secondary Roads installation requiring erosion control treatment where no endwall or endsection is specified on plans, construction is to be in accordance with Detail 3 shown above.

Type A or B treatment to be as specified on the plans.

Type B ▨ The top 6" of the stone shall be grouted in accordance with section 408.09, except that the portion below the top 6" may be choked with fine material.

* Use Typical Section shown on plans or normal side slope, bottom width, and depth of channel, ditch or natural ground.

113.01

STONE FOR EROSION CONTROL
VIRGINIA DEPARTMENT OF HIGHWAYS AND TRANSPORTATION

SPECIFICATION REFERENCE: 205, 303, 418

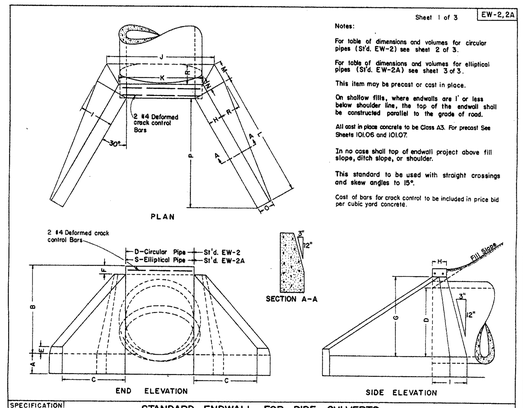

SPECIFICATION REFERENCE: 105.04, 302

STANDARD ENDWALL FOR PIPE CULVERTS
VIRGINIA DEPARTMENT OF HIGHWAYS AND TRANSPORTATION

101.03

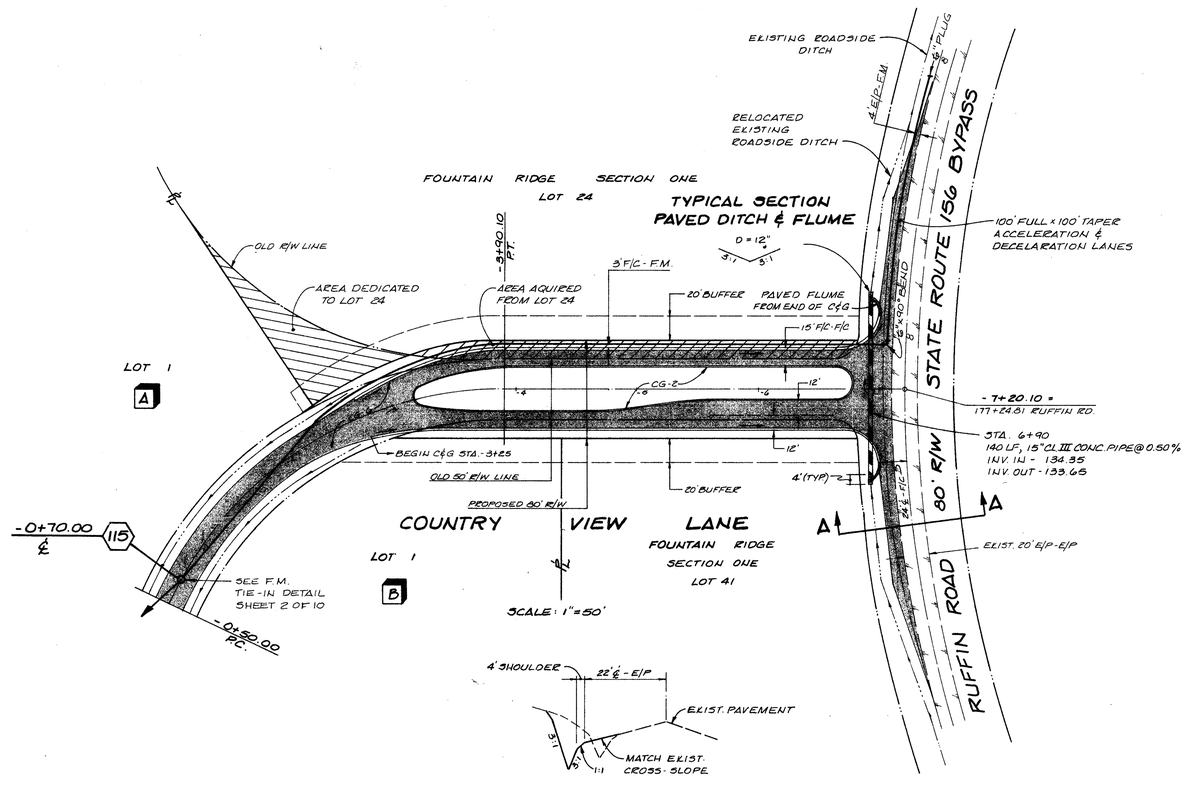

TYPICAL SECTION A-A

N.T.S.

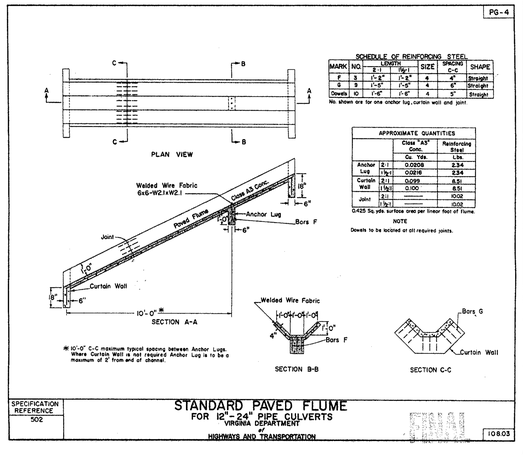

SPECIFICATION REFERENCE: 502

STANDARD PAVED FLUME FOR 12"-24" PIPE CULVERTS
VIRGINIA DEPARTMENT OF HIGHWAYS AND TRANSPORTATION

108.03

J. K. TIMMONS & ASSOCIATES, P.C.
ENGINEERS · SURVEYORS · PLANNERS
711 NORTH COURTHOUSE ROAD RICHMOND, VIRGINIA 23236 TELEPHONE: (804) 794-3500
8803 STAPLES MILL ROAD HENRICO, VIRGINIA 23228 TELEPHONE: (804) 262-7386
411 EAST BROADWAY PETERSBURG, VIRGINIA 23803 TELEPHONE: (804) 458-8985

FOUNTAIN RIDGE
SECTION 3
BLAND DISTRICT PRINCE GEORGE COUNTY, VA.

DETAILS

△ NOV. 13, 1987

REVISIONS

COMMONWEALTH OF VIRGINIA
WALTER M. ALTMAN III
LICENSE NO 11039
PROFESSIONAL ENGINEER

STAMP: AS NOTED
SCALE: G.F.C.
DRAWN BY: SEP. 18, 87
DATE DRAWN: E.L.G.
DESIGNED: W.M.A. III
CHECKED: 8 OF 10
SHEET NUMBER: 8610-44
JOB NUMBER