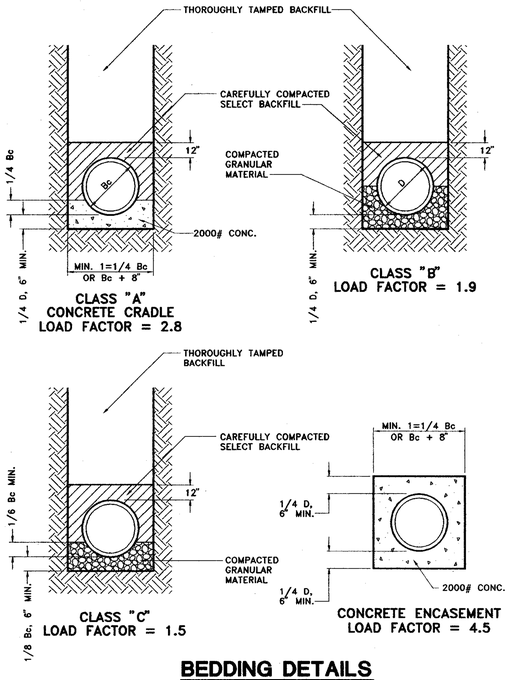

BEDDING DETAILS

NOT TO SCALE

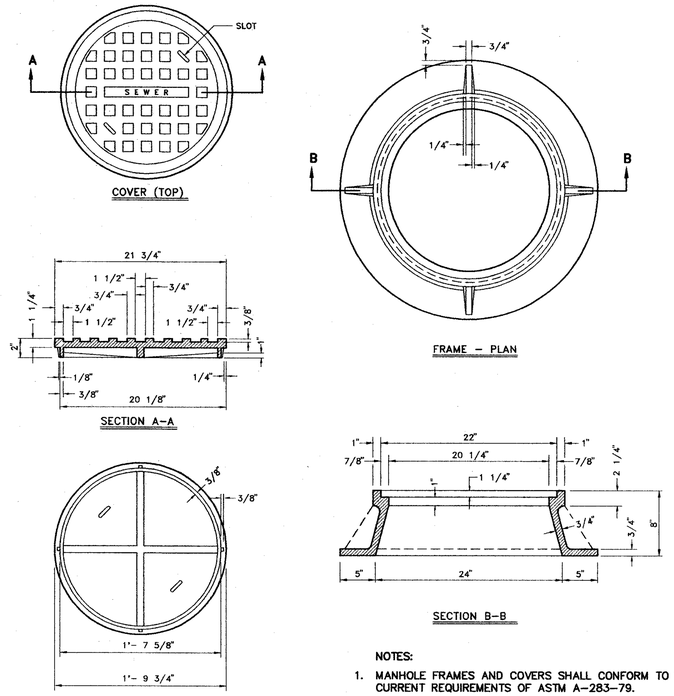

NOTES:

1. MANHOLE FRAMES AND COVERS SHALL CONFORM TO THE CURRENT REQUIREMENTS OF ASTM A-283-79.
2. MANHOLE FRAME AND COVER SHALL BE CAPITOL FOUNDRY MH-1/STR, OR EQUAL.

STANDARD MANHOLE FRAME AND COVER

NOT TO SCALE

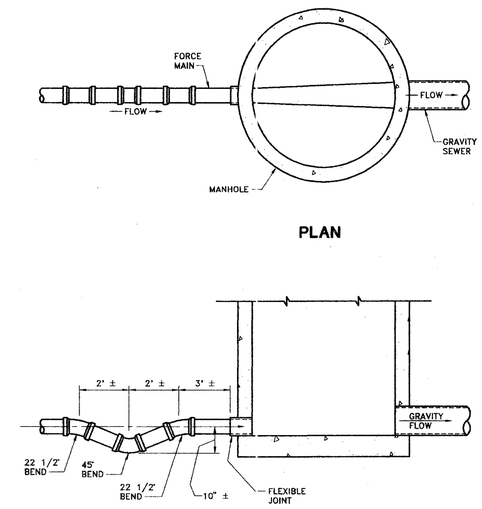

FORCE MAIN DISCHARGE

NOT TO SCALE

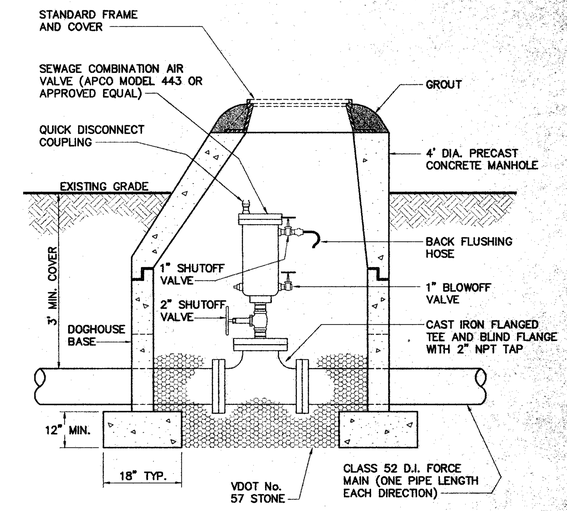

SEWAGE COMBINATION AIR VALVE

NOT TO SCALE

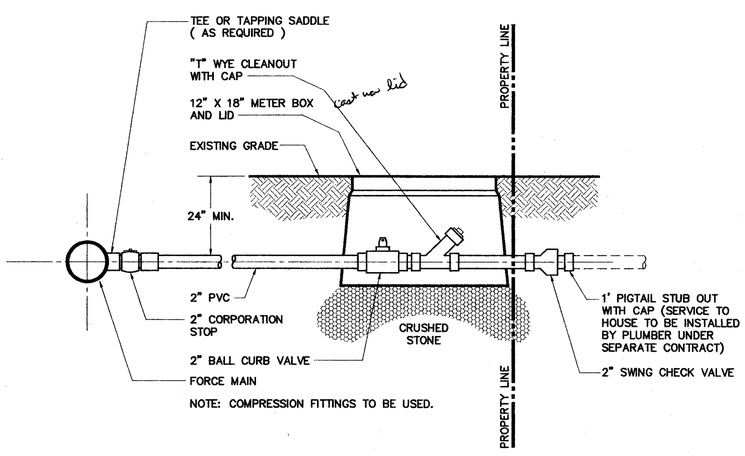

FORCE MAIN SERVICE CONNECTION

NOT TO SCALE

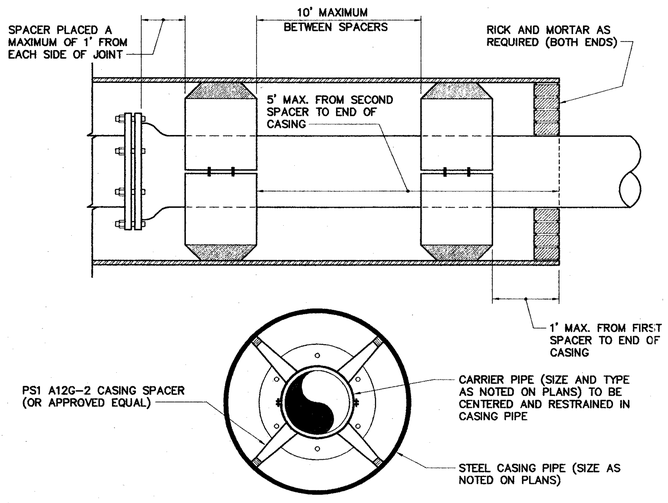

PIPE ENCASEMENT DETAIL

NOT TO SCALE

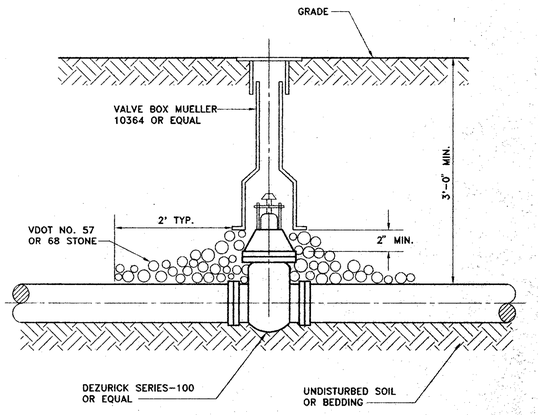

TYPICAL PLUG VALVE INSTALLATION

NOT TO SCALE

COMMONWEALTH OF VIRGINIA
THOMAS S. COX
No. 023882
5/31/95
PROFESSIONAL ENGINEER

Draper Aden Associates CONSULTING ENGINEERS BLACKSBURG, VIRGINIA – RICHMOND, VIRGINIA – NASHVILLE, TENNESSEE	DESIGNED: TSC DRAWN: HLJ CHECKED: SPH DATE: 5/31/95	MISCELLANEOUS DETAILS DISPUTANTA SEWAGE COLLECTION SYSTEM IMPROVEMENTS – CONTRACT II PRINCE GEORGE COUNTY, VIRGINIA	REVISIONS:	SCALE: AS NOTED PLAN NO. T-21073.07	SHEET 14 OF 15