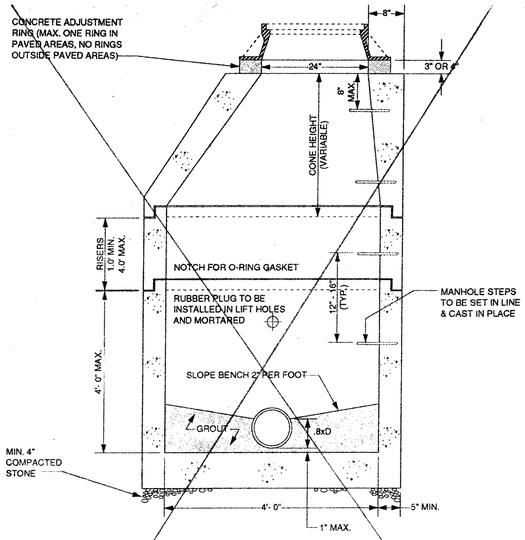

1. MANHOLES SHALL MEET CURRENT REQUIREMENTS OF ASTM C-478.
2. CONCRETE SHALL BE 4000 PSI MINIMUM COMPRESSIVE STRENGTH
3. ALL REINFORCING STEEL SHALL MEET CURRENT REQUIREMENTS OF ASTM A-615.
4. TAPERED JOINT WITH O-RING GASKET SHALL MEET CURRENT REQUIREMENTS OF ASTM C-361 & C-443.
5. COLD APPLIED JOINT SEALER (SAHOM-99) SHALL BE USED IN ADDITION TO THE JOINT SPECIFIED.
6. FLEXIBLE JOINT (KOR-N-SEAL OR EQUAL) REQUIRED ON ALL MANHOLE CONNECTIONS. VOIDS SHALL BE FILLED TO INSIDE FACE OF MANHOLE WITH NON-SHRINK GROUT.

PRECAST CONCRETE MANHOLE

NO SCALE

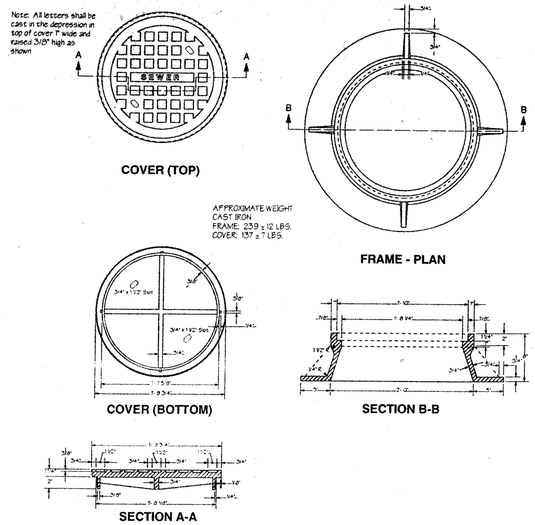

NOTES

1. MANHOLE FRAMES AND COVERS SHALL CONFORM TO THE CURRENT REQUIREMENTS OF ASTM A-283-79.
2. MANHOLE FRAME & COVER SHALL BE AS CAPITOL FOUNDRY MH-1/STR, OR EQUAL.

STANDARD MANHOLE FRAME AND COVER

NO SCALE

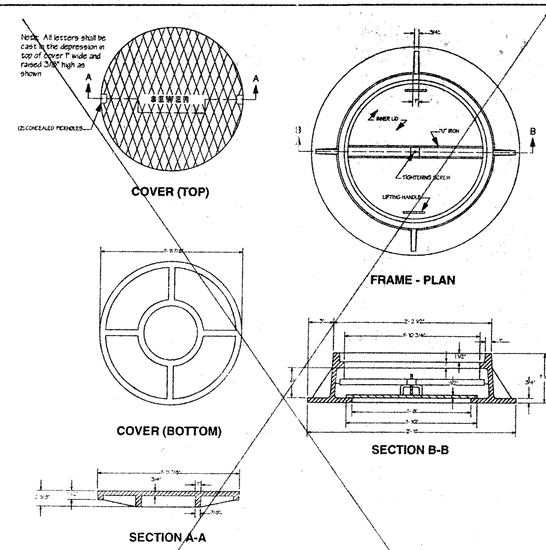

NOTES

1. MANHOLE FRAMES AND COVERS SHALL CONFORM TO THE CURRENT REQUIREMENTS OF ASTM A-283-79.
2. MANHOLE FRAME & COVER SHALL BE AS NEENAH FOUNDRY R-1755C, OR EQUAL.

WATERTIGHT MANHOLE FRAME AND COVER

NO SCALE

NOTES:

1. CONCRETE TO BE CLASS A-4
2. ALL REINFORCING TO MEET REQUIREMENTS OF CURRENT ASTM SPEC. 1-615.
3. MANHOLE SECTIONS TO MEET REQUIREMENTS OF CURRENT ASTM SPEC. C-478.
4. TAPERED JOINT WITH O-RING GASKET TO MEET CURRENT REQUIREMENTS OF ASTM SPEC. C-361.
5. DOGHOUSE OPENING MAY ONLY BE USED WHEN PLACING A NEW MH OVER AN EXISTING LINE; OTHERWISE, THE OPENING MUST BE CAST. SIZE, LOCATION & ANGLE OF ENTRY SHALL BE AS REQUIRED BY THE PLANS.
6. MANHOLE SECTION TO BE CAST IN THE BASE A MINIMUM OF 2".
7. HOLES IN PRECAST UNITS ARE TO BE 4" MIN. TO 8" MAX. LARGER THAN THE OUTSIDE DIA. OF THE PROPOSED PIPE.
8. BASE SECTION TO PROVIDE MIN. 6" CLEARANCE BETWEEN TOP OF PIPE OPENING AND BOTTOM OF BELL AND SPIGOT JOINT.

MIN. DIMENSIONS			
MH	4'-0"	5'-0"	6'-0"
A	48"	60"	72"
B	58"	72"	86"
C	5"	6"	7"
D	8"	10"	10"

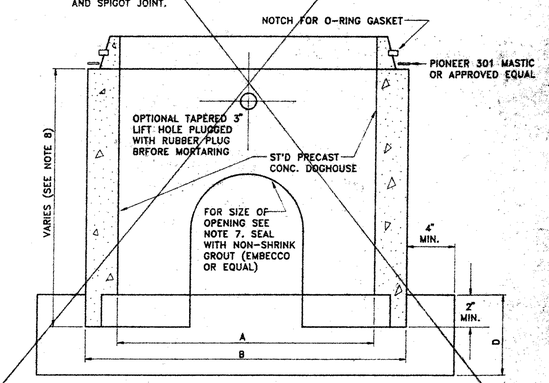

MANHOLE DOGHOUSE BASE

NOT TO SCALE

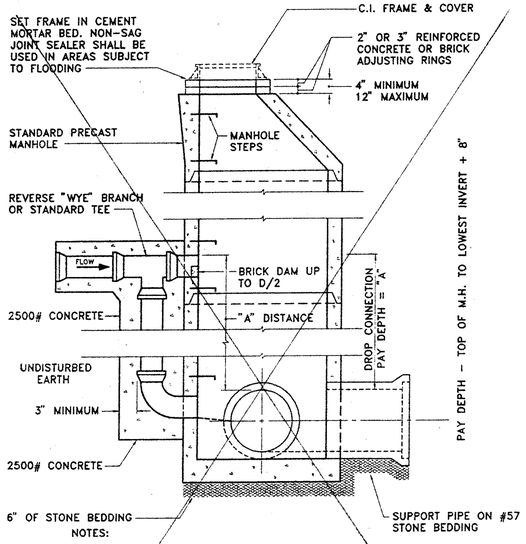

NOTES:

WHERE "A" DISTANCE IS LESS THAN 2'-6" THE INCOMING SEWER SHALL BE LOWERED SO THAT THE TOP OF THE INCOMING SEWER IS NOT MORE THAN 6" ABOVE THE TOP OF THE OUTGOING SEWER.

WHERE "A" DISTANCE IS GREATER THAN 2'-6" USE STANDARD DROP CONNECTION.

CONCRETE ENCASEMENT MAY BE ELIMINATED IF D.I. PIPE AND FITTINGS ARE USED FOR DROP CONNECTION

DROP MANHOLE DETAIL

NO SCALE

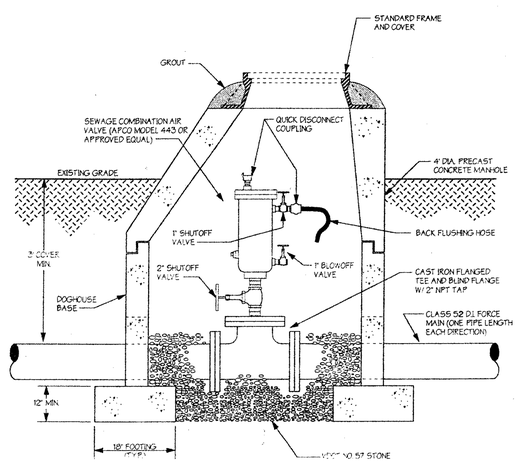

SEWAGE COMBINATION AIR VALVE

NO SCALE

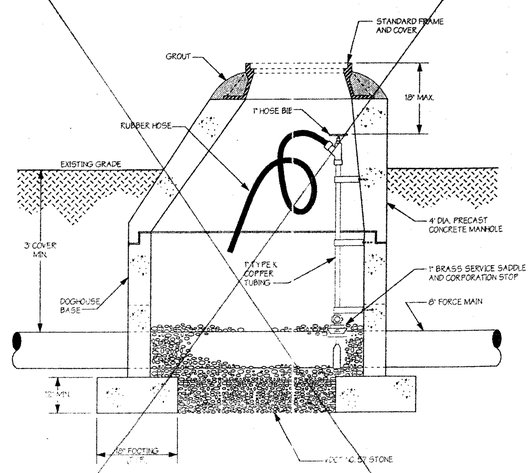

MANUAL AIR RELEASE VALVE

NO SCALE

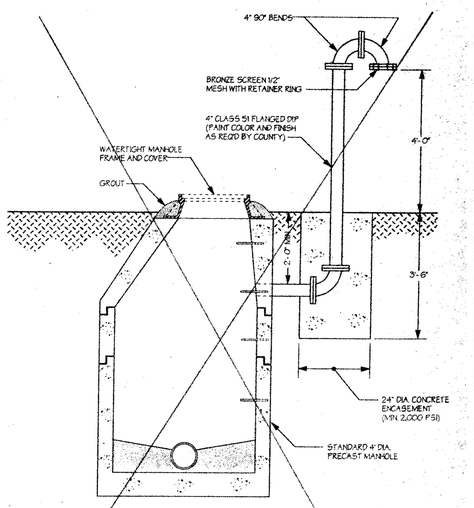

WATERTIGHT MANHOLE VENT

NO SCALE

COMMONWEALTH OF VIRGINIA
THOMAS S. COX
No. 023882
12/11/94
PROFESSIONAL ENGINEER

COMMONWEALTH OF VIRGINIA
FREDERICK T.M. PRIBBLE
No. 10055
12/11/94
PROFESSIONAL ENGINEER

Draper Aden Associates
CONSULTING ENGINEERS
BLACKSBURG, VIRGINIA – RICHMOND, VIRGINIA – NASHVILLE, TENNESSEE

DESIGNED:	TSC
DRAWN:	TSC
CHECKED:	SPH
DATE:	5/20/94

DETAILS
DISPUTANTA SEWAGE COLLECTION SYSTEM IMPROVEMENTS
PRINCE GEORGE COUNTY, VIRGINIA

REVISIONS:
12/11/94 – FMHA, VDA, COUNTY COMMENTS
5/8/95 - C.O. #1

SCALE: NOT TO SCALE

PLAN NO. T-21073

SHEET 44 OF 45