PRINCE GEORGE COUNTY
DEPARTMENT OF PUBLIC UTILITIES

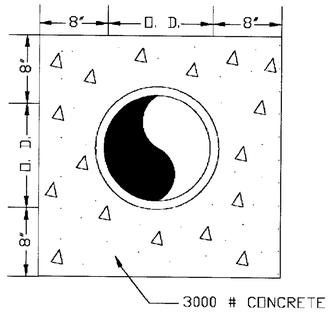

NOTE: NOT ALLOWED ON WATER LINE PROJECT WITHOUT PRIOR APPROVAL.

DATE JAN. 2008	PIPE ENCASEMENT DETAIL	DRWG. NO. CAS-5
REVISIONS		

PRINCE GEORGE COUNTY
DEPARTMENT OF PUBLIC UTILITIES

NOTE: MANHOLE'S IN EXCESS OF 12' IN HEIGHT WILL ONLY BE ALLOWED IN A CASE BY CASE BASIS

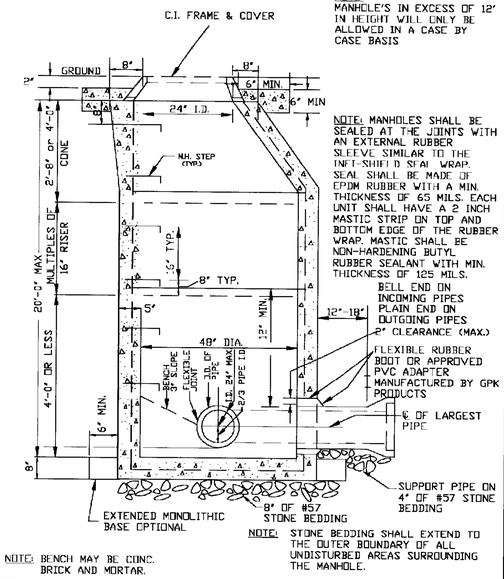

NOTE: STONE BEDDING SHALL EXTEND TO THE OUTER BOUNDARY OF ALL UNDISTURBED AREAS SURROUNDING THE MANHOLE.

NOTE: BENCH MAY BE CONC. BRICK AND MORTAR.

NOTE: MANHOLES SHALL BE SEALED AT THE JOINTS WITH AN EXTERNAL RUBBER SLEEVE SIMILAR TO THE INFI-SHIELD SEAL WRAP. SEAL SHALL BE MADE OF EPDM RUBBER WITH A MIN. THICKNESS OF 65 MILS. EACH UNIT SHALL HAVE A 2 INCH MASTIC STRIP ON TOP AND BOTTOM EDGE OF THE RUBBER WRAP. MASTIC SHALL BE NON-HARDENING BUTYL RUBBER SEALANT WITH MIN. THICKNESS OF 125 MILS.

BELL END ON INCOMING PIPES
PLAIN END ON OUTGOING PIPES
2" CLEARANCE (MAX.)
FLEXIBLE RUBBER BOOT OR APPROVED PVC ADAPTER MANUFACTURED BY GPK PRODUCTS
℄ OF LARGEST PIPE

DATE JAN. 2008	STANDARD PRECAST CONCRETE MANHOLE SEWERS 8" TO 24" LOCATED OUTSIDE PAVEMENT KEPT AREAS	DRWG. NO. MAN-2B ALTERNATE
REVISIONS		

PRINCE GEORGE COUNTY
DEPARTMENT OF PUBLIC UTILITIES
VDOT APPROVED

* ADT<500 = 4" OF BM-2
ADT<1000 = 6" OF BM-2
ADT<2000 = 8" OF BM-2
ADT>2000 = ENGINEER SHALL DESIGN PAVEMENT RESTORATIONS BASED ON LOCATION AND TRAFFIC VOLUME, IN ACCORDANCE WITH VDOT'S APPROVAL.

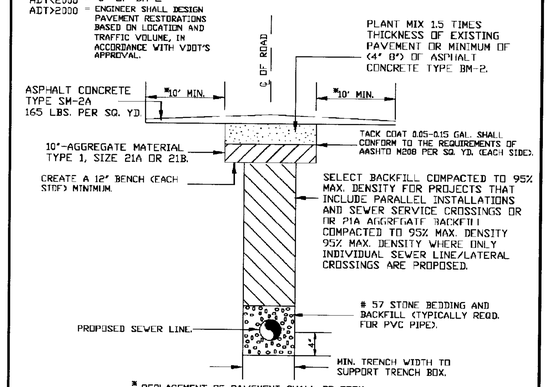

* REPLACEMENT OF PAVEMENT SHALL BE FROM EDGE OF PAVEMENT TO EDGE OF PAVEMENT.

NOTES:

A. ADT = AVERAGE DAILY TRAFFIC COUNT - INFORMATION ON TRAFFIC COUNT MAY BE OBTAINED FROM VDOT PUBLICATIONS AVAILABLE UPON REQUEST FROM VDOT.

B. FOR PARALLEL WORK, A COPY OF A DENSITY TEST RESULTS TAKEN EVERY 1-2 FEET OF FILL MUST BE FURNISHED BY THE CONTRACTOR TO VDOT. THE TEST RESULTS MUST VERIFY THAT TESTS WERE TAKEN AT A MINIMUM SPACING OF EVERY 100 FEET ALONG THE TRENCH. IF THESE RESULTS CAN NOT BE PROVIDED, VDOT WILL REQUIRE AN ALTERNATE PAVEMENT REPLACEMENT DETAIL (SEE PAV-5).

DATE JAN. 2008	TYPICAL SECTION FOR REPAIR OF OPEN CUT AFTER PLACEMENT OF SEWER IN PLANT MIX ROADS (APPLIES TO PARALLEL INSTALLATION AND CROSSINGS)	DRWG. NO. PAV-5 SHT. 1 OF 2
REVISIONS		

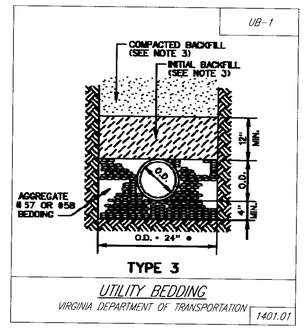

TYPE 3

UTILITY BEDDING
VIRGINIA DEPARTMENT OF TRANSPORTATION 1401.01

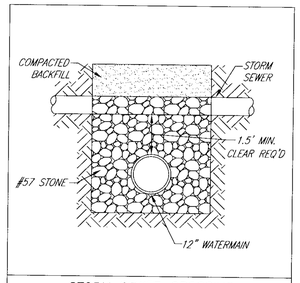

STORM SEWER CROSSING
(NTS)

PRINCE GEORGE COUNTY
DEPARTMENT OF PUBLIC UTILITIES

OPTION 1: IF GRADE ADJUSTMENT IS NOT REQUIRED:
A. CONNECTOR PIPE MAY BE APPROVED D.I. OR P.V.C. PIPE.
B. ALL JOINTS FROM HYDRANT TEE TO HYDRANT ARE TO BE RESTRAINED WITH APPROVED JOINT RESTRAINT DEVICES AND THRUST BLOCKING BEHIND THE HYDRANT

OPTION 2: IF GRADE ADJUSTMENT IS REQUIRED:
A. THE CONNECTOR PIPE SHALL BE OF THE OFFSET DESIGN SO THAT THE FIRE HYDRANT CAN BE ADJUSTED TO ENSURE PLACEMENT AT THE PROPER GRADE. WHEN THE CONNECTOR PIPE IS THE OFFSET DESIGN IT SHALL HAVE AN ANCHORING FEATURE AT BOTH ENDS SO THAT WHEN USED WITH M.J. SPLIT GLANDS A RESTRAINED JOINT IS PROVIDED.
B. ALL JOINTS FROM HYDRANT TEE TO HYDRANT ARE TO BE RESTRAINED WITH APPROVED JOINT RESTRAINT DEVICES AND THRUST BLOCKING BEHIND THE HYDRANT
C. THE CONNECTOR PIPE SHALL BE CEMENT LINED IN ACCORDANCE WITH AWWA C110-ANSI A214.
D. THE CONNECTOR PIPE SHALL BE DUCTILE IRON AWWA C153-MSSD A21.53 AND POSITIONED BETWEEN THE FIRE HYDRANT AND GATE VALVE.
E. HYDRANT BREAKAWAY FLANGE SHOULD BE LOCATED NO MORE THAN 6" ABOVE FINISHED GRADE AND NOT BELOW FINISHED GRADE.

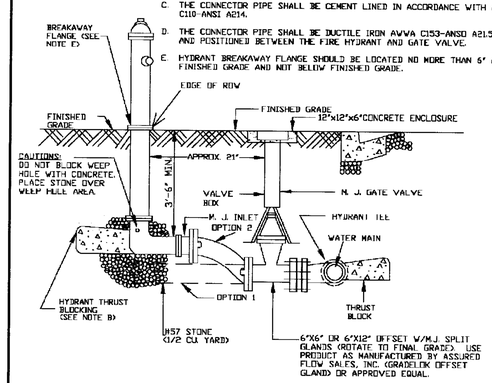

NOTE:
(A). HYDRANT ISOLATION VALVE TO BE LOCATED AS CLOSE TO THE HYDRANT AS POSSIBLE
(B) MINIMUM COVER AT DITCH MUST BE 3'6" OR GREATER.

DATE JAN. 2008	TYPICAL FIRE HYDRANT DETAIL	DRWG. NO. FIR-2
REVISIONS		

PRINCE GEORGE COUNTY
DEPARTMENT OF PUBLIC UTILITIES

MAXIMUM TRENCH WIDTH SHALL BE 33" FOR SEWER UP TO 12" DIAMETER. USE OUTSIDE PIPE DIAMETER PLUS 18" FOR SEWER 15" AND LARGER.

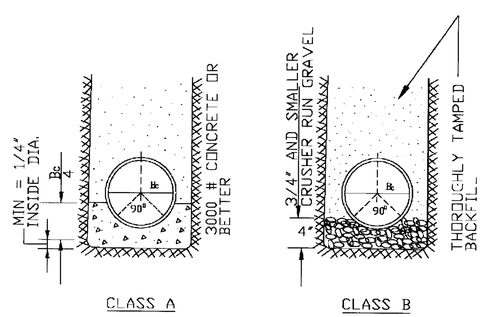

CLASS A

CLASS B

DATE JAN. 2008	TYPES OF SEWER BEDDING	DRWG. NO. SEW-1
REVISIONS		

PRINCE GEORGE COUNTY
DEPARTMENT OF PUBLIC UTILITIES

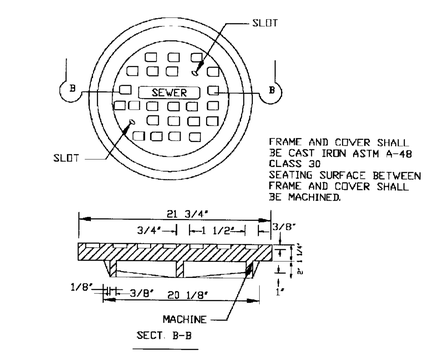

DATE JAN. 2008	STANDARD MANHOLE FRAME & COVER	DRWG. NO. MAN-11
REVISIONS		

PRINCE GEORGE COUNTY
DEPARTMENT OF PUBLIC UTILITIES

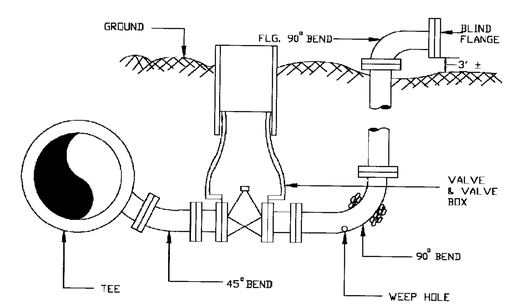

NOTE:

1. THE LARGE BLOW-OFF SHALL BE DRAINED TO PREVENT FREEZING.
2. ALL PIPE AND FITTINGS SHALL BE FLANGED OR M.J. RESTRAIN JOINTS.
3. WEEP HOLE TO BE CUT/DRILLED 2' BELOW GROUND LEVEL TO SUFFICIENTLY ALLOW STAND PIPE TO DRAIN. BACKFILL WITH AT LEASE 1/2 CUBIC YARD OF CLEAN STONE.

DATE JAN. 2008	TYPICAL 4" AND LARGER BLOW-OFF	DRWG. NO. WAT-4
REVISIONS		

Rinker Design Associates, P.C.
Engineering · Surveying · Land Planning · Transportation · Environmental Services
927 Maple Grove Drive, Suite 105, Fredericksburg, Virginia 22407
on the web @ www.rdacivil.com
Telephone: (540) 548-4470, Fax: (540) 548-4471
"Forming Challenges into Opportunities"

CROSSPOINTE CENTRE
WATERLINE & SANITARY SEWER DESIGN
Prince George County, Virginia

PROJECT MANAGER TIM WELSH, RCCL (540)898-7464
SURVEYED BY TIMMONS GROUP (PROVIDED BY PRINCE GEORGE CO.)
DESIGN SUPERVISED BY DARELL FISCHER P.E., RDA
DESIGNED BY KRISTINA T. HARRIS P.E., RDA