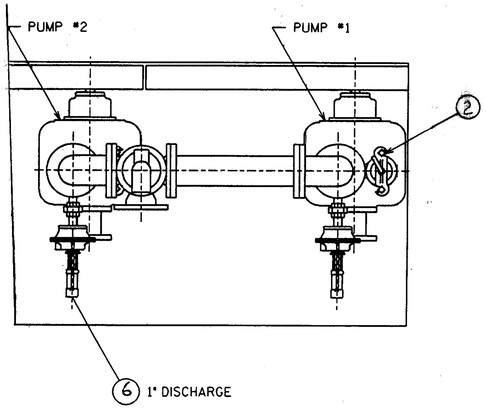

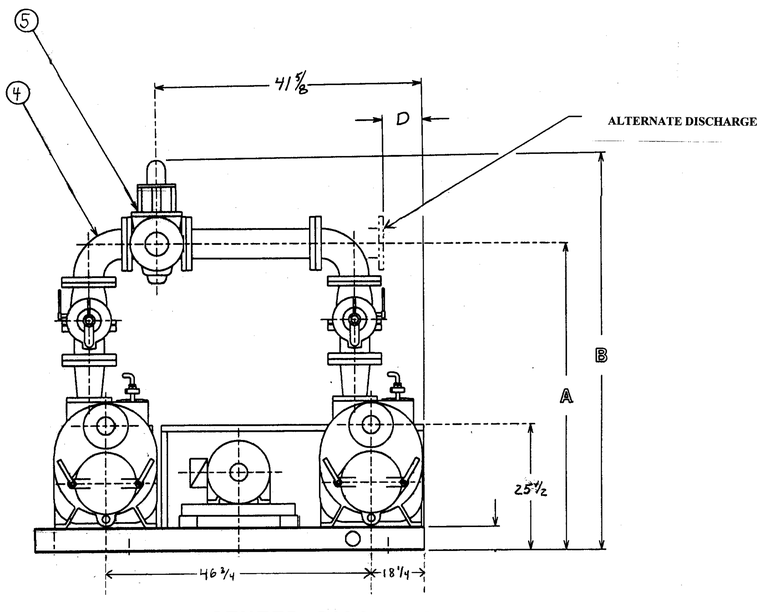

CENTER DISCHARGE

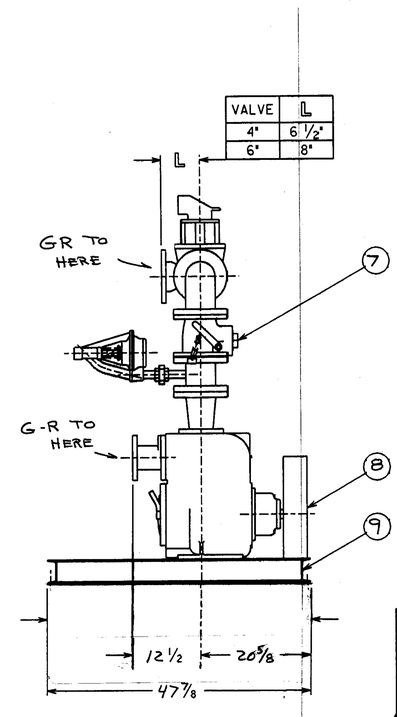

VALVE	L
4"	6 1/2"
6"	8"

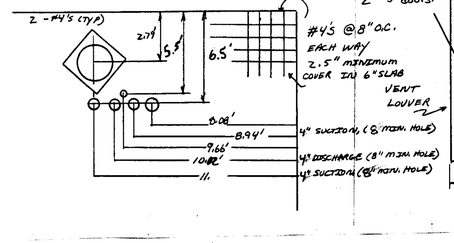

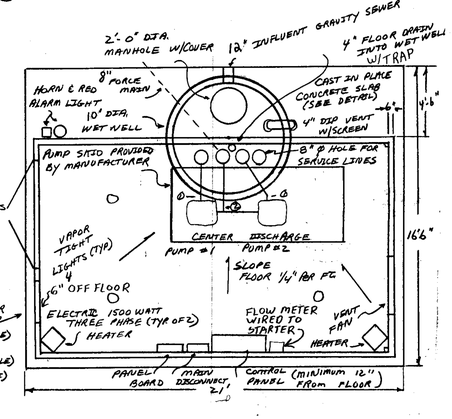

ITEM	DESCRIPTION	MATERIAL & SIZE
1	MOTOR	CAST IRON
2	PUMP	CAST IRON T4A3-B
4	DISCHARGE ELBOW 90°	CAST IRON
5	DISCHARGE PLUG VALVE	CAST IRON 3-WAY
6	AIR RELEASE VALVE	CAST IRON 1" (SHIPPED LOOSE)
7	DISCHARGE CHECK VALVE	CAST IRON
8	BELT GUARD ASSY	STEEL
9	PUMP & MOTOR BASE ASSY	STEEL

CENTER DISCHARGE					
PLUMBING			A	B	D
SUCT.	DISCH.	HDR.			
4"	4"	4"	54 3/4"	68 3/8"	X
4"	4"	6"	56 1/4"	71 1/8"	

LEFT HAND DISCHARGE					
PLUMBING			A	B	C
SUCT.	DISCH.	HDR.			
4"	4"	4"	54 3/4	59 1/4	72 5/8
4"	4"	6"	65 1/4	70 3/4	73 1/2

CROSSPOINTE CENTRE — GRAVITY SEWER, PUMPING STATION & FORCE MAIN

SCALE: | APPROVED BY: | DRAWN BY DME

DATE: 10/27/08 | REVISED 2/19/09

PRINCE GEORGE COUNTY, VA.

DESIGNED BY: STEPHEN E. McBRIDE, COUNTY ENGINEER, PO BOX 68, PRINCE GEORGE, VA. 23875

DRAWING NUMBER 4/4

24X36 PRINTED ON NO. 1000H CLEARPRINT