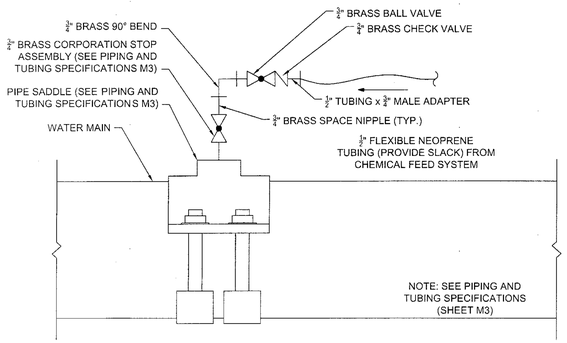

CHEMICAL FEED PIPING - DETAIL
SCALE: NOT TO SCALE

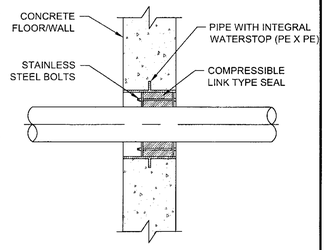

FLOOR/WALL PENETRATION
NOT TO SCALE

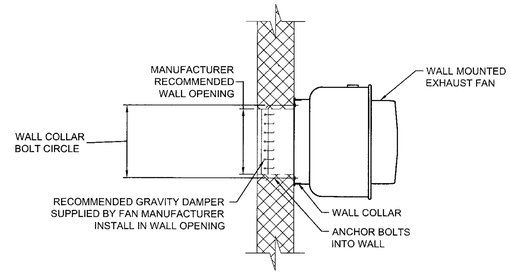

EXHAUST FAN
SCALE: NOT TO SCALE — M-1-008

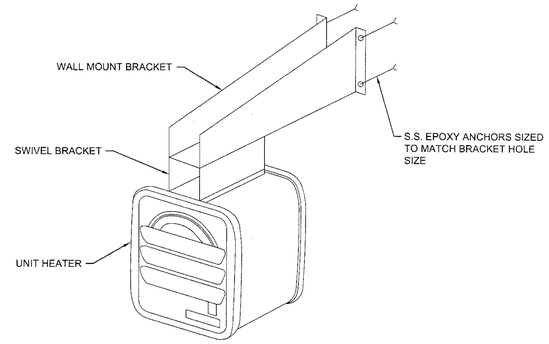

NOTES:
1. MINIMUM MOUNTING HEIGHT 7'-0" ABOVE FLOOR.
2. WALL MOUNT BRACKET TO BE SIZED AND SUPPLIED BY MANUFACTURER AS PART OF HEATER

ELECTRIC UNIT HEATER
SCALE: NOT TO SCALE — M-1-004

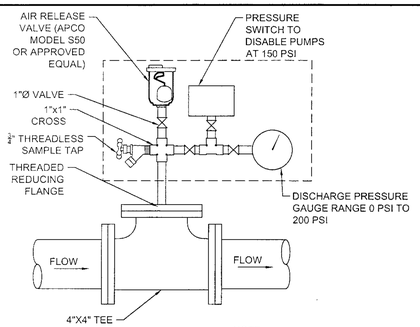

NOTE:
PROVIDE ON BOTH WELL LINES.

DISCHARGE RISER DETAIL
SCALE: NOT TO SCALE — M-1-009

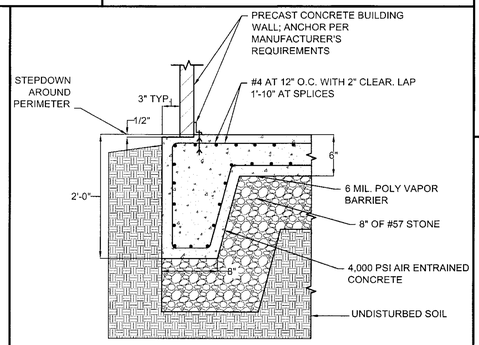

TURNDOWN SLAB DETAIL
NOT TO SCALE

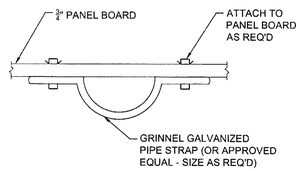

PIPE STRAP - DETAIL
SCALE: NOT TO SCALE

SCHEDULE M165				
ADJUSTABLE SADDLE (DIM IN INCHES)				
PIPE SIZE	A	B	C	D DIA X LG
3	2 1/2	7	1 1/2	5/8 X 5
4-12	3	7 1/2	2 1/2	5/8 X 5
14-16	4	9	3	5/8 X 5
18-20	6	11	3 1/2	3/4 X 6
24-36	6	11	4	3/4 X 6

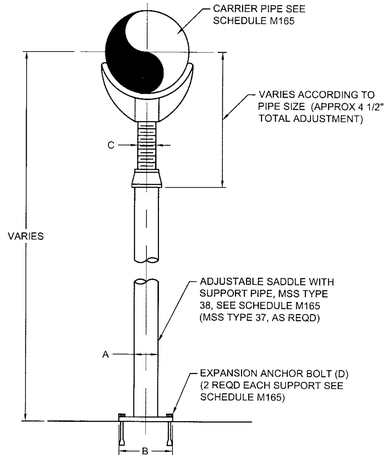

ADJUSTABLE SADDLE
SCALE: NOT TO SCALE — M165 / TG-0803

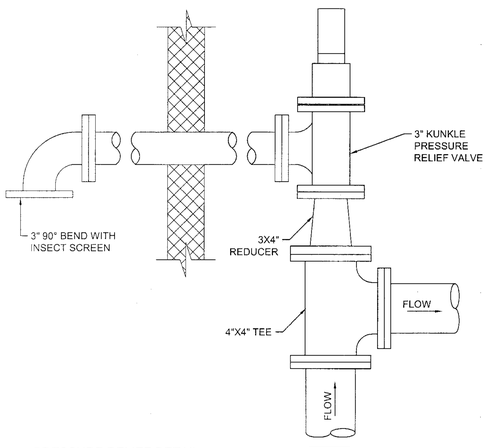

PRESSURE RELIEF DETAIL
SCALE: NOT TO SCALE — M-1-010

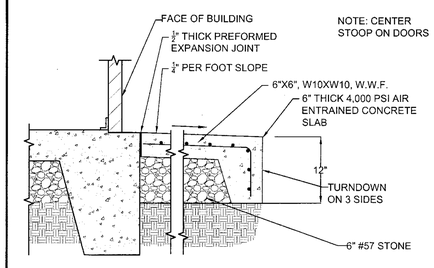

4'-0" X 12'-0" BUILDING STOOP - SECTION
NOT TO SCALE

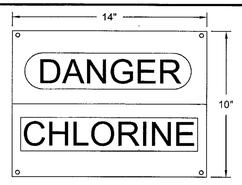

NOTE:
SIGN SHALL BE 10"X14" FIBERGLASS WITH 4 HOLES, USA BLUEBOOK #46092 OR APPROVED EQUAL.

WARNING SIGN FOR CHEMICAL STORAGE
NOT TO SCALE

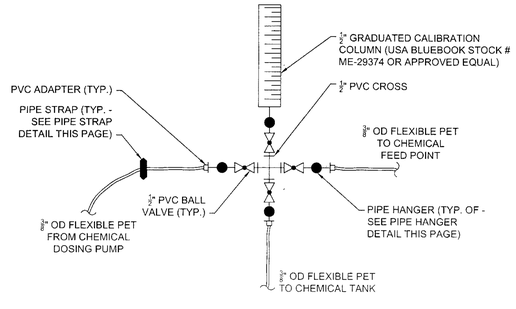

CALIBRATION COLUMN PIPING ASSEMBLY - DETAIL
SCALE: NOT TO SCALE

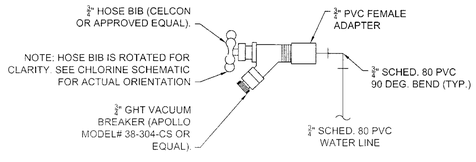

HOSE BIB - DETAIL
SCALE: NOT TO SCALE

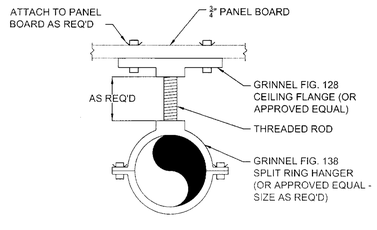

PIPE HANGER - DETAIL
SCALE: NOT TO SCALE

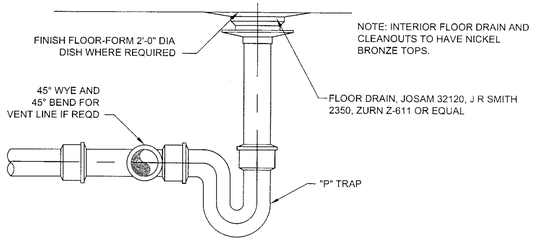

FLOOR DRAIN
NOT TO SCALE

COMMONWEALTH OF VIRGINIA
WESLEY G. HUNNIUS
Lic. No. 040151
12/3/13
PROFESSIONAL ENGINEER

VIRGINIA | NORTH CAROLINA | WEST VIRGINIA

YOUR VISION ACHIEVED THROUGH OURS.

Site Development | Residential | Infrastructure | Technology

DATE	REVISION DESCRIPTION
5/18/10	PER COUNTY COMMENTS
9/30/13	ALL SHEETS
12/3/13	PER COUNTY COMMENTS

DATE: 09/30/13
DRAWN BY: C. McNAIR
DESIGNED BY: C. McNAIR
CHECKED BY: W. HUNNIUS
SCALE: AS SHOWN

LIMMONS GROUP

CHAPPELL CREEK ELEVATED STORAGE TANK AND WATER SUPPLY SYSTEM
PRINCE GEORGE COUNTY, VIRGINIA
WELL HOUSE DETAILS

JOB NO. 22791-201

M2

This document, as an instrument of service, is property of LIMMONS GROUP and may not be reproduced in whole or in part and shall not be used for other projects, nor shall it be used for construction purposes without the express written consent of LIMMONS GROUP.

L:\20__\22__Chappell Creek\dwg\Sheet\CD\Water System\22791 M-1-0-WELL.dwg | Plotted on 12/3/2013 6:01 PM | by Adrienne Beckman