CONSTRUCTION NOTES

1. ALL CONSTRUCTION SHALL BE COMPLETED IN ACCORDANCE WITH THE PRINCE GEORGE COUNTY STANDARDS AND SPECIFICATIONS.
2. CONTRACTOR SHALL BE REQUIRED TO ATTEND A PRE-CONSTRUCTION MEETING WITH THE ENGINEER, PRINCE GEORGE COUNTY'S DEPARTMENT OF PUBLIC UTILITIES AND THE DEPARTMENT OF PUBLIC WORKS, PRIOR TO STARTING ANY WORK ON THIS PROJECT. ALL WORK SHALL BE SUBJECT TO INSPECTION BY BOTH STATE AND COUNTY INSPECTORS.
3. DISTURBED AREAS SHALL BE KEPT TO A MINIMUM, AND RESTORATION OF SUCH AREAS SHALL BE DONE BY THE CONTRACTOR AS QUICKLY AS POSSIBLE. ALL DISTURBED AREAS SHALL BE SEEDED OR PAVED WITHIN 7 DAYS AFTER BEING DISTURBED OR BACKFILLED, OR AS DIRECTED BY THE INSPECTOR ASSIGNED TO THE PROJECT.
4. ALL CONSTRUCTION AND MATERIALS SHALL CONFORM TO THE LATEST EDITION OF THE V.D.O.T. ROAD AND BRIDGE SPECIFICATIONS AND ROAD AND BRIDGE STANDARDS WHERE APPLICABLE.
5. FINAL ACCEPTANCE BY THE COUNTY AND STATE SHALL NOT BE MADE UNTIL ALL WORK SHOWN ON THE APPROVED PLANS IS COMPLETED, INCLUDING PAVING, GRADING AND ALL ADJUSTMENTS.
6. WHERE UNSUITABLE MATERIAL IS ENCOUNTERED, IT SHALL BE REMOVED WHERE NECESSARY, AND REPLACED WITH SUITABLE MATERIAL TO THE SATISFACTION OF THE STATE OR COUNTY INSPECTOR.
7. ALL WATERLINE VALVES AND ANY ASSOCIATED CONCRETE COLLARS MUST BE FLUSH WITH THE FINISHED GRADE ELEVATION.
8. THE HORIZONTAL DATUM FOR THIS PROJECT IS LOCAL AND THE VERTICAL DATUM FOR ALL ELEVATIONS SHOWN IS LOCAL.
9. DURING CONSTRUCTION, ALL STORM INLETS SHALL BE PROTECTED BY SILT TRAPS MAINTAINED AND MODIFIED AS REQUIRED BY CONSTRUCTION PROGRESS.
10. THE ALLOWABLE PER JOINT DEFLECTION FOR PIPES TO BE LAID WITHOUT FITTINGS SHALL BE ONE-HALF THAT RECOMMENDED BY AWWA STANDARDS OR ONE-HALF THE MANUFACTURER'S ALLOWABLE LIMITS, WHICHEVER IS LESS.
11. CONTRACTOR SHALL RESTORE EXISTING DITCHES TO ORIGINAL CONDITION AND INSURE THAT POSITIVE DRAINAGE IS MAINTAINED WITHIN THE DITCH. PAVEMENT AND SHOULDERS MUST ALSO BE RESTORED TO THEIR ORIGINAL CONDITION.
12. MEGALUG RESTRAINED JOINTS SHALL BE INSTALLED TO RESTRAIN PIPE A MINIMUM OF 60 LINEAR FEET ON BOTH SIDES OF ALL FITTINGS AND VALVES.

WATER NOTES

1. ALL MATERIALS FOR THE WATER SYSTEMS SHOWN SHALL BE SUPPLIED AND INSTALLED IN ACCORDANCE WITH THE LATEST APPLICABLE SPECIFICATIONS OF PRINCE GEORGE COUNTY.
2. ALL WORK SHALL BE SUBJECT TO INSPECTION BY UTILITY DEPARTMENT OFFICIALS. THE CONTRACTOR SHALL BE RESPONSIBLE FOR NOTIFICATION OF APPROPRIATE COUNTY OFFICIALS 48 HOURS PRIOR TO START OF WORK.
3. MINIMUM CLEAR COVER FOR ALL PRESSURE PIPE SHALL BE 3.5 FEET.
4. BACKFILL FOR ALL UTILITIES SHALL BE PLACED GENERALLY IN ACCORDANCE WITH PRINCE GEORGE COUNTY SPECIFICATIONS, AND THE FOLLOWING CRITERIA: (1.) NO TRENCH SHALL BE BACKFILLED UNTIL AUTHORIZED BY THE COUNTY. MATERIALS USED FOR BACKFILL FROM THE BOTTOM OF THE TRENCH TO 12" (TWELVE INCHES) ABOVE THE PIPE SHALL BE SELECT MATERIAL, FREE FROM FROST, LARGE CLODS, STONES AND DEBRIS, AND SHALL BE THOROUGHLY AND CAREFULLY COMPACTED. 2. BACKFILL SHALL BE COMPACTED BY MECHANICAL TAMPING THROUGHOUT THE DEPTH OF THE TRENCH TO INSURE A SUITABLE SUBBASE, ACCEPTABLE TO VDOT, IF THE MATERIAL IS TAKEN FROM THE DITCH IS NOT SUITABLE FOR BACKFILLING IT SHALL BE REMOVED AND ACCEPTABLE MATERIAL USED FOR BACKFILLING THE TRENCH.
5. CONTRACTOR SHALL VERIFY LOCATION AND ELEVATION OF ALL UNDERGROUND UTILITIES SHOWN ON THE PLANS IN AREAS OF CONSTRUCTION PRIOR TO STARTING WORK. CONTACT ENGINEER IMMEDIATELY, IF: LOCATION OR ELEVATION IS DIFFERENT FROM THAT SHOWN ON THE PLAN, OR IF: THERE APPEARS TO BE A CONFLICT, AND UPON DISCOVERY OF ANY UTILITY NOT SHOWN ON THE PLAN. TO MISS THE UTILITY CALL "MISS UTILITY" OF CENTRAL VIRGINIA: 1-800-552-7001 (TOLL FREE).
6. ALL WATERLINE VALVES MUST BE LOCATED ON THE TEE OR CROSS WHEN APPLICABLE.

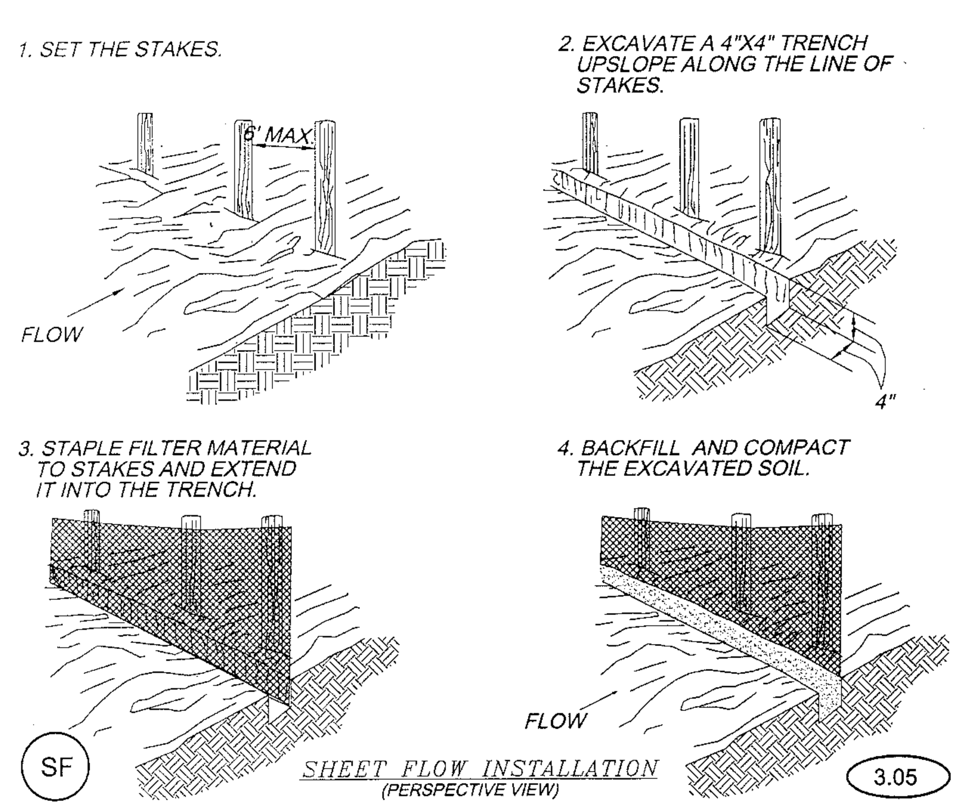

CONSTRUCTION OF SILT FENCE (W/O WIRE SUPPORT

NOT TO SCALE

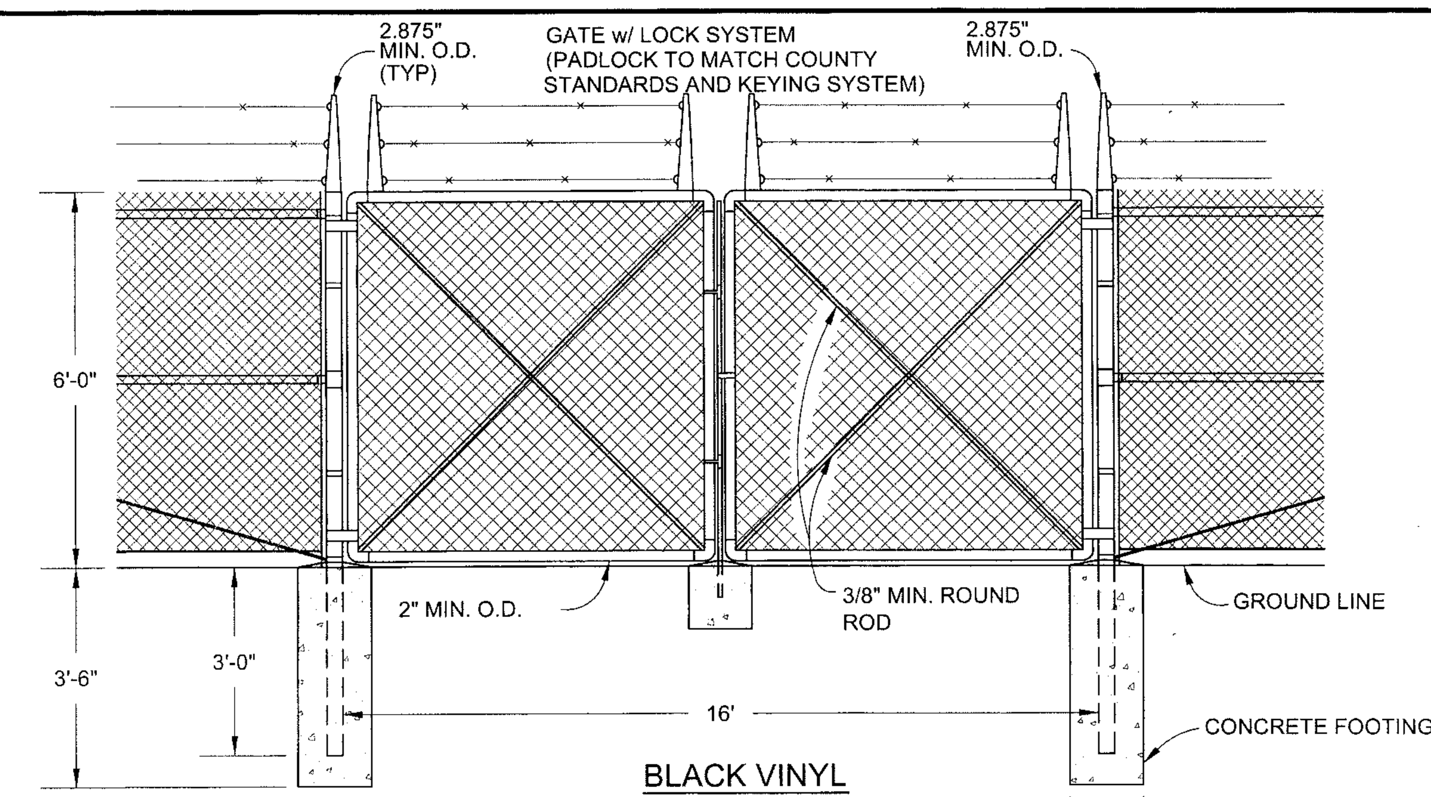

BLACK VINYL DOUBLE SWING GATE

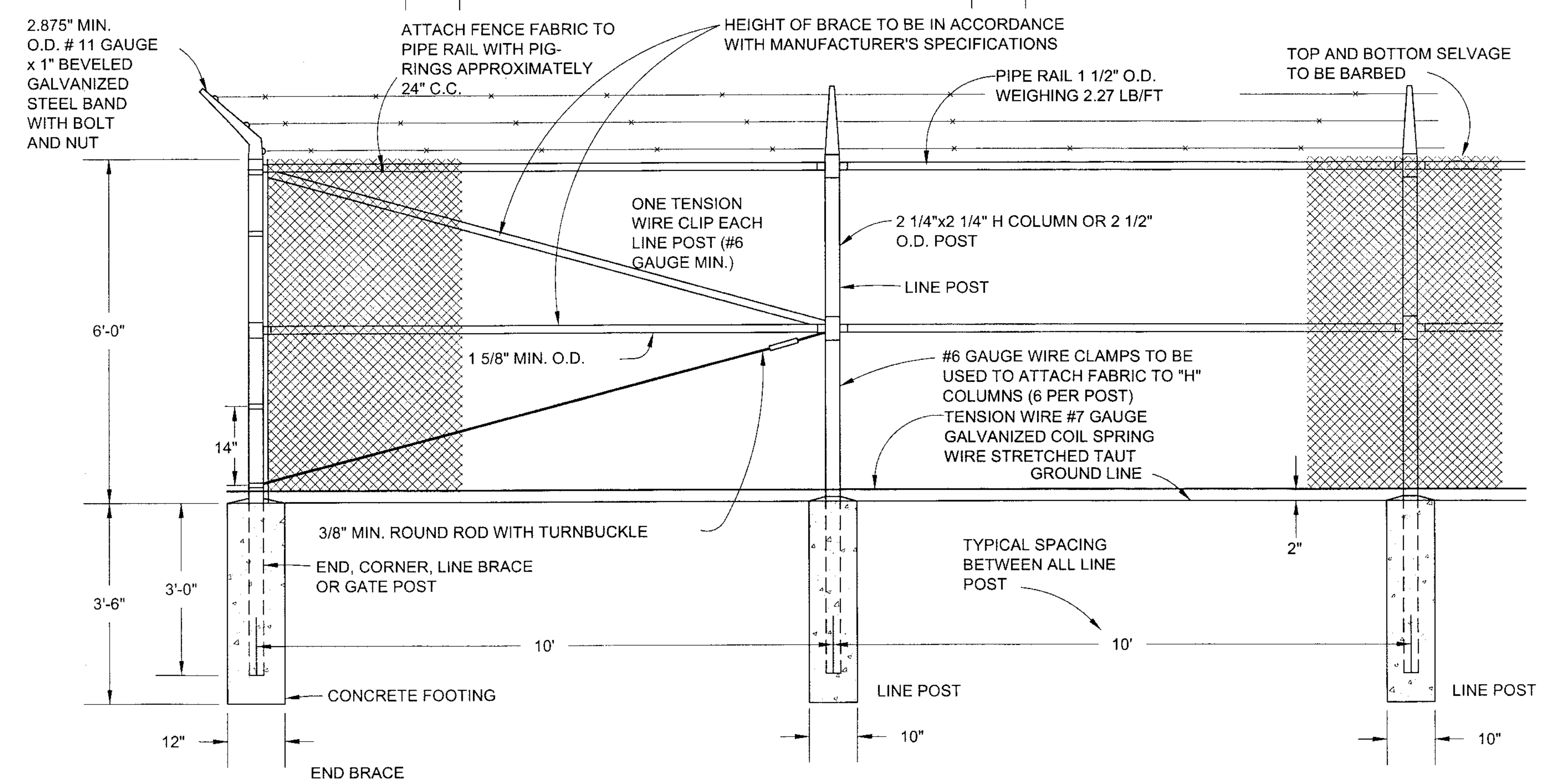

BLACK VINYL CHAINLINK FENCE AND GATE

C101

SCALE: NOT TO SCALE

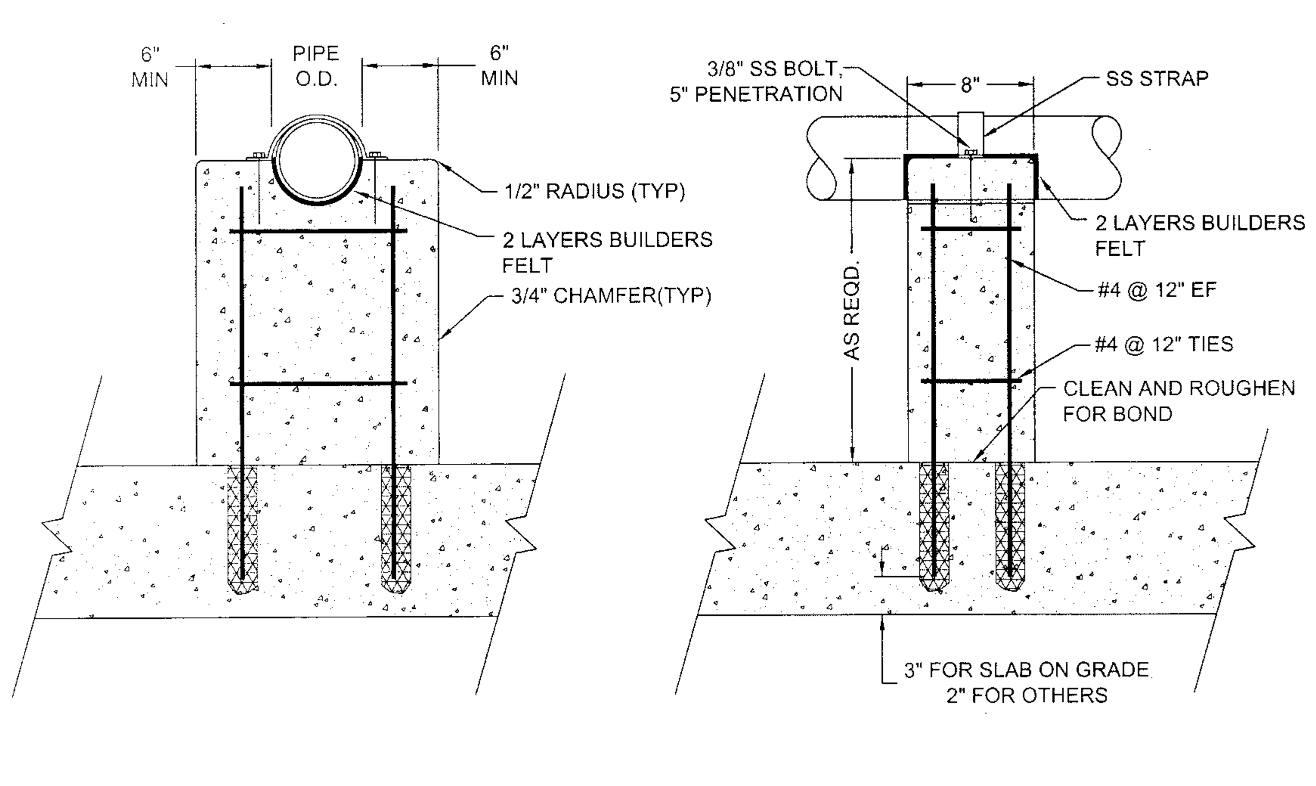

CONCRETE PIPE SUPPORT DETAIL - INTERIOR

S129 / TG-0803

SCALE: NOT TO SCALE

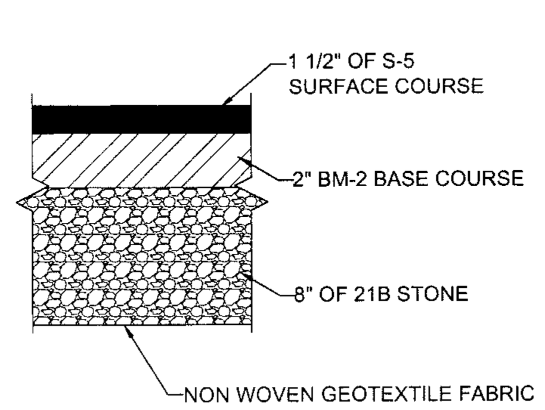

PAVEMENT DETAIL

C130 / TG-0803

SCALE: NOT TO SCALE

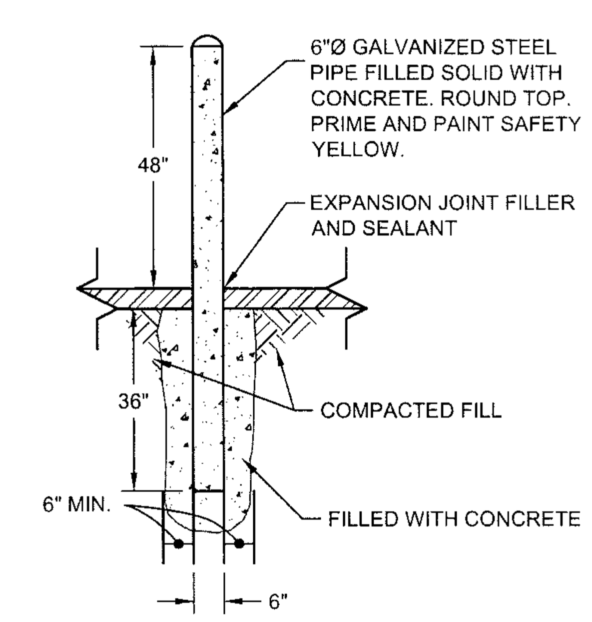

EXTERIOR BOLLARD DETAIL

C128 / TG-0803

SCALE: NOT TO SCALE

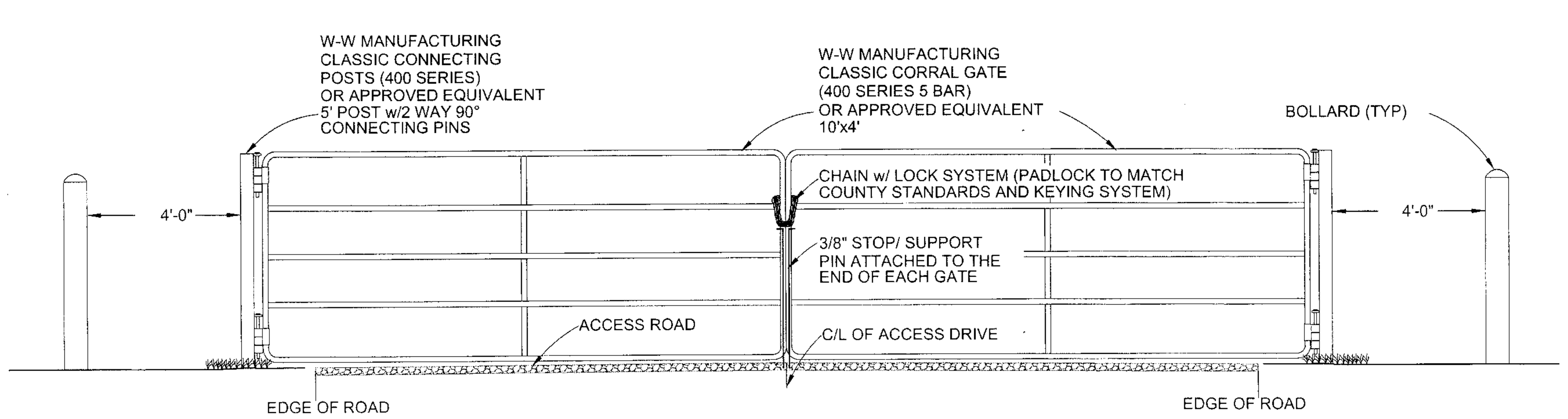

FARM GATE AT ACCESS ROAD ENTRANCE

C102

SCALE: NOT TO SCALE

PRINCE GEORGE COUNTY DEPARTMENT OF PUBLIC UTILITIES

OPTION 1: IF GRADE ADJUSTMENT IS NOT REQUIRED:
A. CONNECTOR PIPE MAY BE APPROVED D.I. OR P.V.C. PIPE.
B. ALL JOINTS FROM HYDRANT TEE TO HYDRANT ARE TO BE RESTRAINED WITH APPROVED JOINT RESTRAINT DEVICES AND THRUST BLOCKING BEHIND THE HYDRANT

OPTION 2: IF GRADE ADJUSTMENT IS REQUIRED:
A. THE CONNECTOR PIPE SHALL BE OF THE OFFSET DESIGN SO THAT THE FIRE HYDRANT CAN BE ADJUSTED TO ENSURE PLACEMENT AT THE PROPER GRADE. WHEN THE CONNECTOR PIPE IS THE OFFSET DESIGN IT SHALL HAVE AN ANCHORING FEATURE AT BOTH ENDS SO THAT WHEN USED WITH M.J. SPLIT GLANDS A RESTRAINED JOINT IS PROVIDED.
B. ALL JOINTS FROM HYDRANT TEE TO HYDRANT ARE TO BE RESTRAINED WITH APPROVED JOINT RESTRAINT DEVICES AND THRUST BLOCKING BEHIND THE HYDRANT
C. THE CONNECTOR PIPE SHALL BE CEMENT LINED IN ACCORDANCE WITH AWWA C110-ANSI A214.
D. THE CONNECTOR PIPE SHALL BE DUCTILE IRON AWWA C153-ANSO A21.53 AND POSITIONED BETWEEN THE FIRE HYDRANT AND GATE VALVE.
E. HYDRANT BREAKAWAY FLANGE SHOULD BE LOCATED NO MORE THAN 6" ABOVE FINISHED GRADE AND NOT BELOW FINISHED GRADE.

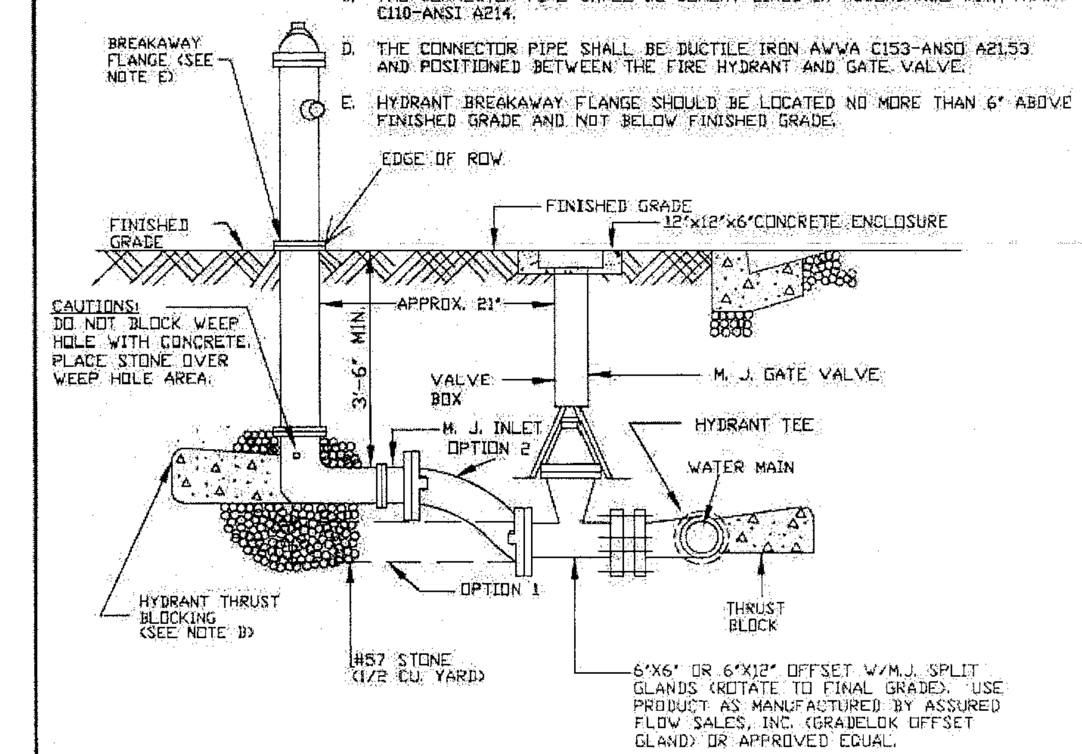

NOTE:
(A). HYDRANT ISOLATION VALVE TO BE LOCATED AS CLOSE TO THE HYDRANT AS POSSIBLE
(B) MINIMUM COVER AT DITCH MUST BE 3'6" OR GREATER.

DATE JAN. 2008	TYPICAL FIRE HYDRANT DETAIL	DRWG. NO. FIR-2
REVISIONS		

PRINCE GEORGE COUNTY DEPARTMENT OF PUBLIC UTILITIES

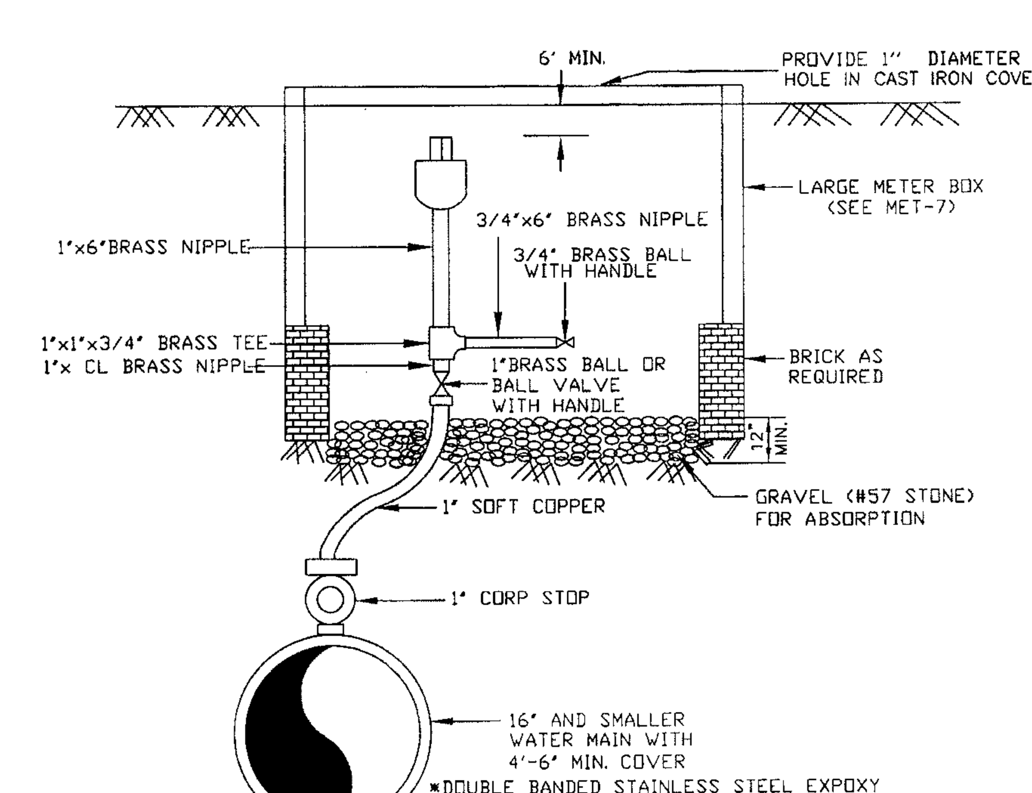

NOTE:
1. IT IS THE RESPONSIBILITY OF THE DESIGN ENGINEER TO DESIGN THE PUBLIC WATER SYSTEM TO MINIMIZE THE NUMBER OF AIR RELEASE VALVES BY ELIMINATING HIGH POINTS WHERE REASONABLY FEASIBLE AND TO PROPERLY SIZE THE AIR RELEASE VALVE TAKING INTO CONSIDERATION ALL THE DESIGN FACTORS, AND KEEPING IN MIND THAT A 1" AIR RELEASE VALVE FOR 16" WATER LINES IS DESIRABLE. ORIFICE SIZE SHALL BE NOTED ON PLANS.
2. ALL COPPER FITTINGS WILL BE FLARE OR COMPRESSION TYPE.
3. SADDLE MUST BE USED. THE JOINT OF PIPE WITH AIR RELEASE MUST BE D.I.
4. WHERE THE AIR RELEASE VALVE IS REMOTE FROM THE WATER LINE THERE MUST BE CONTINUOUS RISE IN THE COPPER SUPPLY LINE TO THE AIR RELEASE VALVE AND NO TRAP SHALL BE PERMITTED.
5. AIR RELEASE VALVE TO BE PLACED WHERE NOT SUBJECT TO FLOODING.

DATE JAN. 2008	1" RELEASE VALVE	DRWG. NO. WAT-1
REVISIONS		

COMMONWEALTH OF VIRGINIA
WESLEY G. HUNNIUS
Lic. No.040151
12/3/13
PROFESSIONAL ENGINEER

VIRGINIA | NORTH CAROLINA | WEST VIRGINIA

YOUR VISION ACHIEVED THROUGH OURS.

Site Development | Residential | Infrastructure | Technology

DATE	REVISION DESCRIPTION
5/18/10	PER COUNTY COMMENTS
9/30/13	ALL SHEETS
12/3/13	PER COUNTY COMMENTS

DATE	09/30/13
DRAWN BY	C. McNAIR
DESIGNED BY	C. McNAIR
CHECKED BY	W. HUNNIUS
SCALE	AS SHOWN

TIMMONS GROUP

CHAPPELL CREEK ELEVATED STORAGE TANK AND WATER SUPPLY SYSTEM

PRINCE GEORGE COUNTY, VIRGINIA

STANDARD NOTES AND DETAILS

JOB NO. 22791-201

SHEET NO. G2

This drawing and the design shown are the exclusive property of TIMMONS GROUP and may not be reproduced in whole or in part and shall not be used for any purpose whatsoever, inclusive, but not limited to construction, bidding, and/or construction staking without the express written consent of TIMMONS GROUP.

L:\201\22791_Chappell Creek\dwg\Sheet\CD\Water System\22791-C0.1, C1.0 - Details, Site PlanE.dwg | Plotted on 12/3/2013 5:18 PM | by Adrienne Beckman