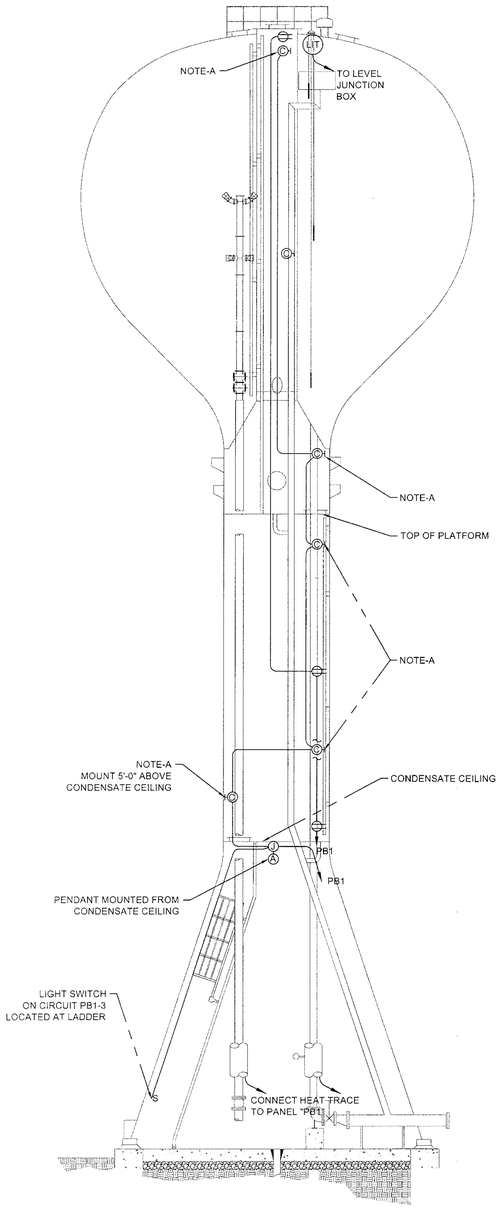

ELECTRICAL ELEVATION - SPHEROID TANK
NOT TO SCALE

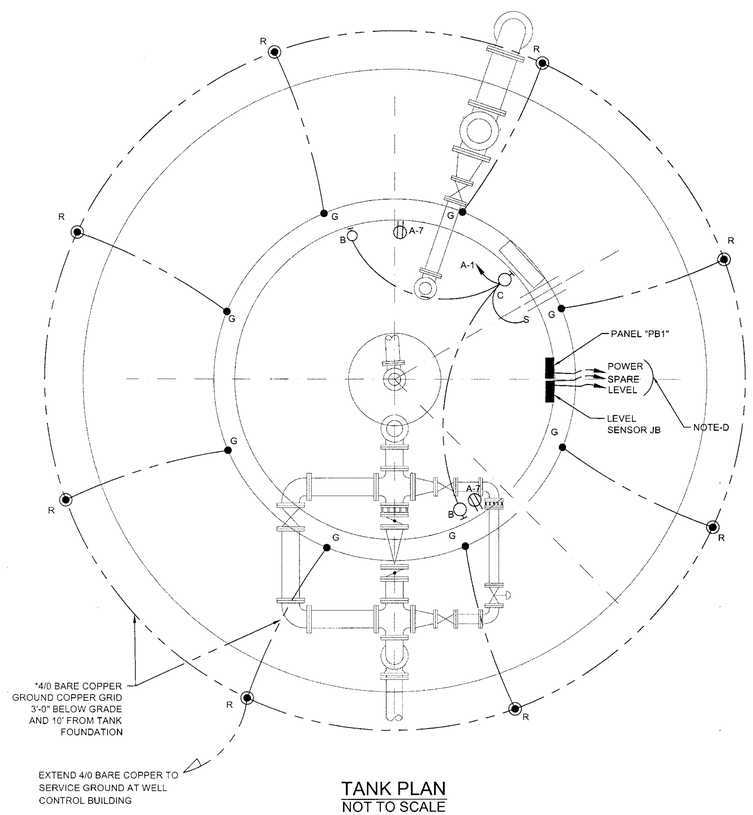

TANK PLAN
NOT TO SCALE

TANK ELECTRICAL NOTES:

A. LIGHTING FIXTURES AND RECEPTACLES SHALL BE ACCESSIBLE FROM LADDER OR FLOOR.
B. PROVIDE ALL MISCELLANEOUS CONDUIT AND CONDUCTORS BETWEEN ELECTRICAL PANELS AND MONITORING DEVICES, LIGHT FIXTURES, SWITCHES AND RECEPTACLES.
B. PROVIDE ALL MISCELLANEOUS CONDUIT AND CONDUCTORS BETWEEN ELECTRICAL PANELS AND HEAT TRACE CONTROLLERS AND THERMOSTATS. COORDINATE HEAT TRACE CABLE AND THERMOSTAT INSTALLATION WITH CIVIL, MECHANICAL/PIPING SPECIFICATIONS AND DRAWINGS FOR HEAT TRACE REQUIREMENTS, LOCATIONS AND DISTANCES.
C. PROVIDE A GALVANIZED UNISTRUT SUPPORT STRUCTURE ANCHORED IN CONCRETE SIZED AS REQUIRED FOR THE ELECTRICAL PANELS INSIDE THE TANK AND TO ALLOW 25% SPARE SPACE
D. PROVIDE THREE 2" PVC SCHEDULE 40 CONDUITS STUBBED UP BELOW THE ELECTRICAL PANELS WITH SWEEPING ELBOWS 36" BELOW GRADE EXTENDING OUT 5' HORIZONTALLY FROM TANK FOUNDATION FOR ELECTRICAL INTERCONNECTION TO WELL HOUSE. CAP AND SEAL UNUSED CONDUITS WITH PULL CORD INSTALLED.
E. ALL UNDERGROUND CONDUITS SHALL BE A MINIMUM OF 24" BELOW GRADE.
F. PROVIDE AND INSTALL A #6 GROUNDING ELECTRODE CONDUCTOR EXTENDED FROM THE PANELBOARD TO THE GROUND RING GROUND ROD.
G. ALL CONDUIT EXTENDING TO EQUIPMENT NOT LOCATED WITHIN 1' OF A WALL SHALL BE EXTENDED IN THE SLAB AND STUBBED UP ADJACENT TO THE EQUIPMENT.

MANUFACTURER SHALL BE AS NOTED OR APPROVED EQUAL.

TANK LIGHTING FIXTURE SCHEDULE

TYPE	MANUFACTURER	CATALOG NUMBER	FIXTURE VOLTAGE	LAMPS NUMBER	LAMPS TYPE	MOUNTING	REMARKS
A	LITHONIA HI-TEK	TX-250M-A30-120-CR	120	1	250WMH	PENDANT	MOUNT FROM CONDENSATE CEILING PROVIDE A LOW TEMPERATURE BALLAST
	DAY-BRITE	LBD-250-M-12-BRA					
B	LITHONIA HI-TEK	TWH-175M-120-SF-CR	120	1	175WMH	WALL	
	DAY-BRITE	WLL-175-M-12					
C	CROUSE-HINDS	VXHBF2SGP	120	1	150A/99	BRACKET	LONG LIFE LAMP, GLOBE, GUARD
	APPLETON	OBVW20G-A					

PANELBOARD: MDP, SERVICE RATED
MOUNTING:SURFACE, 18 CKT (min)
ENCLOSURE: NEMA-3R W/HINGED DOOR

BOLT-ON BREAKERS

MAIN BUSS:200AMP, COPPER
VOLTAGE: 480/277VAC,3Ø,4W,60Hz
INTERIOR: 150AMP MAIN CIRCUIT BREAKER

LOAD DESCRIPTION	CB SIZE	# POLE	CKT NO	AMPS ØA	AMPS ØB	AMPS ØB	CKT NO	# POLE	CB SIZE	LOAD DESCRIPTION
WELL-1 COMBINATION MOTOR STARTER (CMS-1)	30	3	1	14			2	3	30	WELL-2 COMBINATION MOTOR STARTER (CMS-2)
				14						
			3		14		4			
					14					
			5			14	6			
						14				
1Ø TRANSFORMER (T1, 25KVA) 480 PRIMARY TO 240/120 SECONDARY	70	2	7	52			8	3	20	UNIT HEATER (Provide a Circuit Breaker lockout device)
				12						
			9		52		10			
					12					
PREPARED SPACE	--	--	11			--	12			
						12				
PREPARED SPACE	--	--	13	--			14	3	--	SURGE PROTECTIVE DEVICE (SPD) COORDINATE BREAKER SIZE AND CABLE SIZE WITH SPD MANUFACTURER.
				--						
PREPARED SPACE	--	--	15		--		16			
					--					
PREPARED SPACE	--	--	17			--	18			
						--				
KAIC RATING: 65kAIC				92	92	40	TOTAL AMPS			

PANELBOARD: PB, SERVICE RATED
MOUNTING:SURFACE, 18 CKT (min)
ENCLOSURE: NEMA-3R W/HINGED DOOR

BOLT-ON BREAKERS

MAIN BUSS:200AMP, COPPER
VOLTAGE: 240/120VAC,1Ø,3W,60Hz
INTERIOR: 150AMP MAIN CIRCUIT BREAKER

LOAD DESCRIPTION	CB SIZE	# POLE	CKT NO	AMPS ØA	AMPS ØB	CKT NO	# POLE	CB SIZE	LOAD DESCRIPTION
WELL HOUSE LIGHTS	20	1	1	4		2	2	60	WATER TOWER PANELBOARD
				25					
WELL HOUSE RECEPTACLES	20	1	3		8				
					25	4			
PANELBOARD INTEGRAL SURGE ARRESTOR (COORDINATE BREAKER WITH MANUFACTURER)	--	2	5	--			1	30	CHEMICAL FEED CONTROL PANEL (CFP)
				16		6			
			7		--		1	20	EXHAUST FAN CONTROL PANEL (FCP)
					5	8			
SPARE BREAKER	20	1	9	--			--	--	PREPARED SPACE
				--		10			
SPARE BREAKER	20	1	11		--		--	--	PREPARED SPACE
					--	12			
PREPARED SPACE	--	--	13	--			--	--	PREPARED SPACE
				--		14			
PREPARED SPACE	--	--	15		--		--	--	PREPARED SPACE
					--	16			
PREPARED SPACE	--	--	17	--			--	--	PREPARED SPACE
				--		18			
KAIC RATING: 22kAIC (min)				45	38	TOTAL AMPS			

PANELBOARD: PB1, SERVICE RATED
MOUNTING:SURFACE, 18 CKT (min)
ENCLOSURE: NEMA-3R W/HINGED DOOR

BOLT-ON BREAKERS

MAIN BUSS:100AMP, COPPER
VOLTAGE: 240/120VAC,1Ø,3W,60Hz
INTERIOR: 60AMP MAIN CIRCUIT BREAKER

LOAD DESCRIPTION	CB SIZE	# POLE	CKT NO	AMPS ØA	AMPS ØB	CKT NO	# POLE	CB SIZE	LOAD DESCRIPTION
LIGHTS DOOR AND TANK WALLS	20	1	1	5			1	20	RECEPTACLES TANK FLOOR
				5		2			
LIGHTS TANK CEILING AND TUBE	20	1	3		8		1	20	RECEPTACLES TANK TUBE
					5	4			
PANELBOARD INTEGRAL SURGE ARRESTOR (COORDINATE BREAKER WITH MANUFACTURER)	--	2	5	0			1	20	PIPE HEAT TRACE GFCI BREAKER
				12		6			
			7		0		1	20	PIPE HEAT TRACE GFCI BREAKER
					12	8			
SPARE BREAKER	20	1	9	--			1	20	SPARE BREAKER
				--		10			
SPARE BREAKER	20	1	11		--		--	--	PREPARED SPACE
					--	12			
PREPARED SPACE	--	--	13	--			--	--	PREPARED SPACE
				--		14			
PREPARED SPACE	--	--	15		--		--	--	PREPARED SPACE
					--	16			
PREPARED SPACE	--	--	17	--			--	--	PREPARED SPACE
				--		18			
KAIC RATING: 22kAIC (min)				25	25	TOTAL AMPS			

MANUFACTURER SHALL BE AS NOTED OR APPROVED EQUAL.

BUILDING LIGHTING FIXTURE SCHEDULE

TYPE	MANUF.	CAT. NUMBER	LAMPS NO.	LAMPS WATTS	LAMPS TYPE	VOLTS
D	LITHONIA	DMW-2-32-AR-120-ES-STSL	2	40	T12	120VAC
DE	LITHONIA	DMW-2-32-AR-120-ES-STSL-EL WITH EMEGENCY BATTERY	2	40	T12	120VAC
F	SPAULDING	LCC-42-F8-XX-LP-PC1	1	42	F8	120VAC

ABBREVIATIONS: (x - Denotes the item number)

ADP - ALARM DIALER PANEL
BKR - ENCLOSED CIRCUIT BREAKER W/ FLANGE STYLE HANDLE
CFP - CHEMICAL FEED PANEL
CMS - COMBINATION MOTOR STARTER
Disc - MACHINE LOCAL DISCONNECT W/PAD-LOCKABLE OPERATOR HANDLE
FM - FLOW METER
FMC - FLOW METER CONTROLLER
J - JUNCTION BOX
LS - LIGHT SWITCH (number designates unit)
MB - UTILITY METERBASE/CT CABINET
MBDx - NEMA-3R 65kAIC ENCLOSED CIRCUIT BREAKER W/ FLANGE STYLE HANDLE
MDP - MAIN DISTRIBUTION PANELBOARD
PBx - 240/120 DISTRIBUTION PANELBOARD
P - MAIN PUMP (number designates unit)
PDB - POWER DISTRIBUTION BLOCK w/Line & Load Screw Termination Lugs
R - RECEPTACLE (number designates unit)
SPD - SURGE PROTECTION DEVICE
TJB - TELEPHONE COMPANY JUNCTION BOX
U.G. - UNDER GROUND
WCP - WELL CONTROL PANEL

DOMINION CONTROL SYSTEMS, INC.
11080 Leadbetter Road / P.O. Box 6301 / Ashland, VA 23005
PHONE: (804) 752-6323 FAX: (804) 752-6774

COMMONWEALTH OF VIRGINIA
D.L. GLASSCOCK
Lic. No 036309
12/3/13
PROFESSIONAL ENGINEER

VIRGINIA | NORTH CAROLINA | WEST VIRGINIA

YOUR VISION ACHIEVED THROUGH OURS.

Site Development | Residential | Infrastructure | Technology

DATE	REVISION DESCRIPTION
5/18/10	PER COUNTY COMMENTS
9/30/13	ALL SHEETS
12/3/13	PER COUNTY COMMENTS

DATE (09/30/13)
DRAWN BY D. GLASSCOCK
DESIGNED BY D. GLASSCOCK
CHECKED BY D. GLASSCOCK
SCALE AS SHOWN

LIMMONS GROUP

CHOPPEL CREEK ELEVATED STORAGE TANK AND WATER SUPPLY SYSTEM
PRINCE GEORGE COUNTY, VIRGINIA

ELECTRICAL DIAGRAMS AND NOTES

J:\Chappell Creek\dwg\Sheet\CD\Water System\22791 - E2.0.dwg | Plotted on 12/4/2013 8:29 AM | by Adrienne Beckman