SITE PLAN

SCALE : 1" = 20'

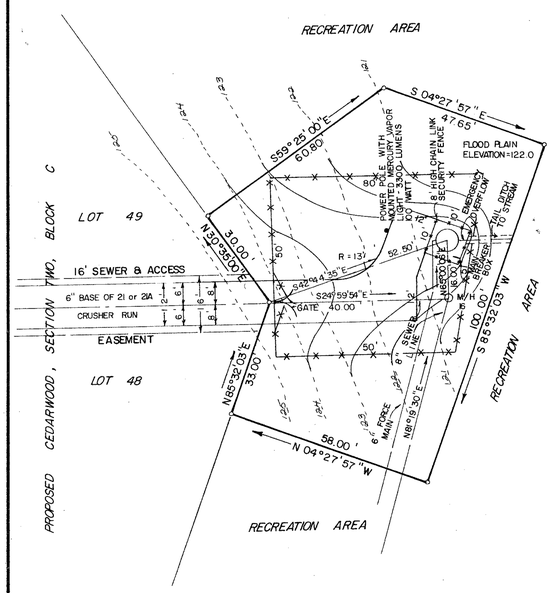

NOTE:
UPON COMPLETION OF CONSTRUCTION, THE SANITARY SEWER SYSTEM WILL BE DEEDED TO PRINCE GEORGE COUNTY.

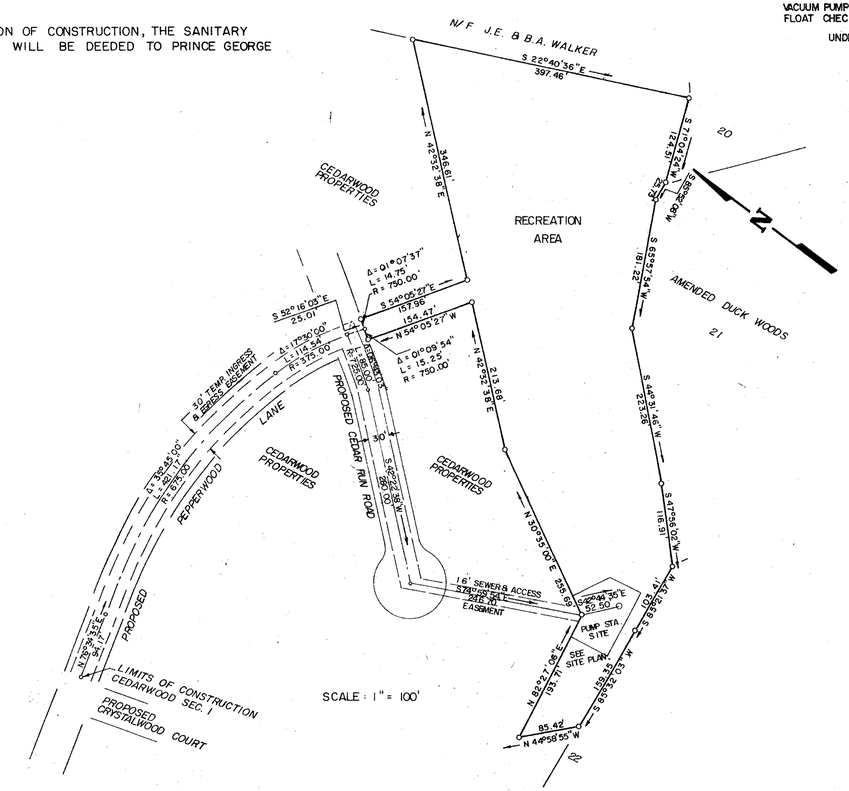

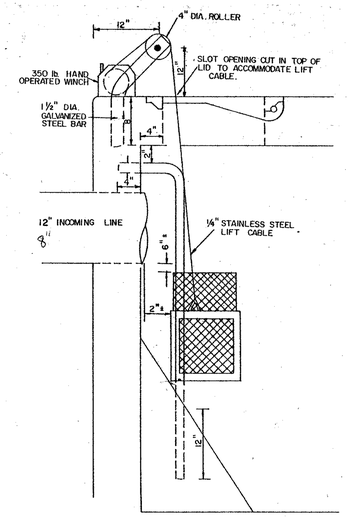

DETAIL
WET WELL BASKET and WINCH
NO SCALE

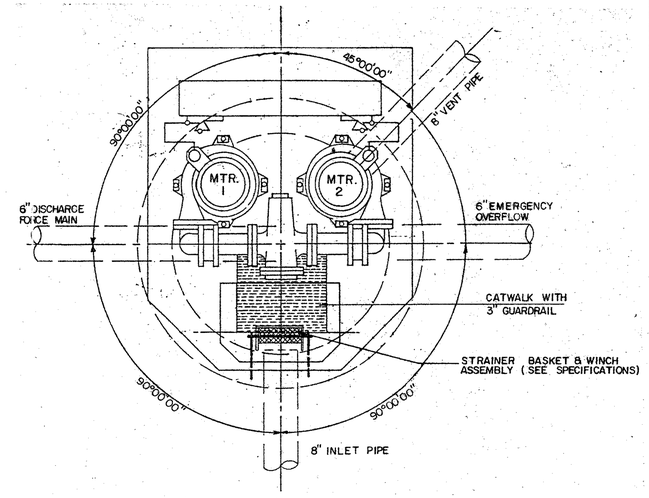

PLAN VIEW
N.T.S.

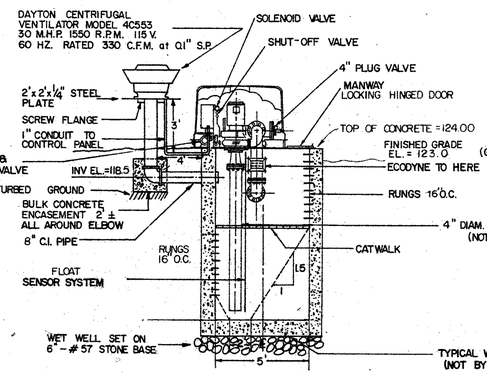

SIDE ELEVATION
N.T.S.

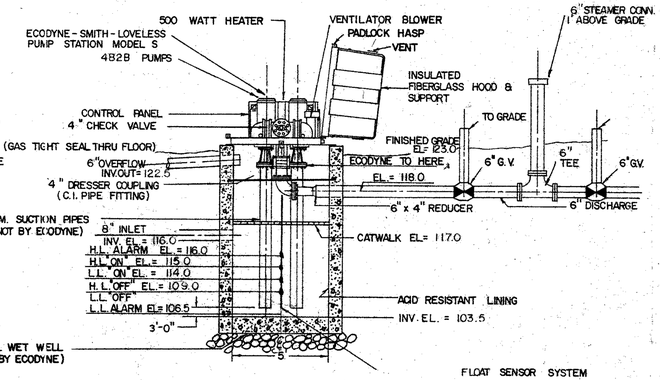

FRONT ELEVATION
N.T.S.

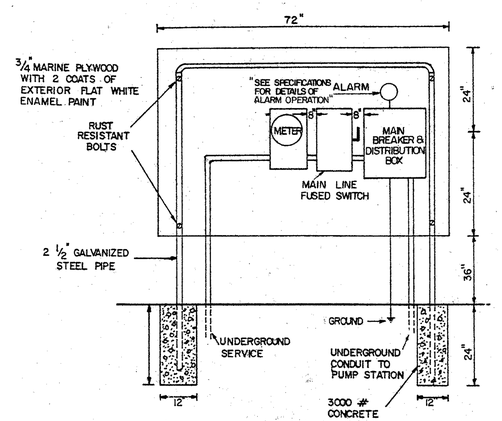

MAIN BREAKER and DISTRIBUTION BOX
N.T.S.

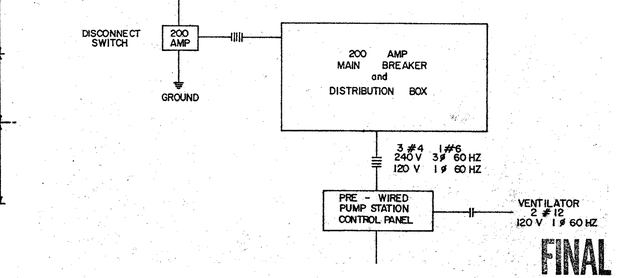

COMMONWEALTH OF VIRGINIA
CHARLES C. TOWNES
LICENSED
10478
PROFESSIONAL ENGINEER

FINAL

CHARLES C. TOWNES & ASSOCIATES
Engineers, Planners, Land Surveyors
110 Norfolk Ave., P.O. Box 97
Colonial Heights, Va. 23834
804-526-6766

CEDARWOOD SECTIONS ONE & TWO
RIVES DISTRICT
PRINCE GEORGE COUNTY, VIRGINIA

PUMP STATION

REVISIONS	
DATE	ITEM
5-26-88	
9-9-88	
9-19-88	
11-8-88	
5-22-89	

DATE	2-16-88
SCALE	AS SHOWN
DRAWN BY	KLJ
CHECKED BY	RAK
F.B. #	
SHEET #	PS - 1