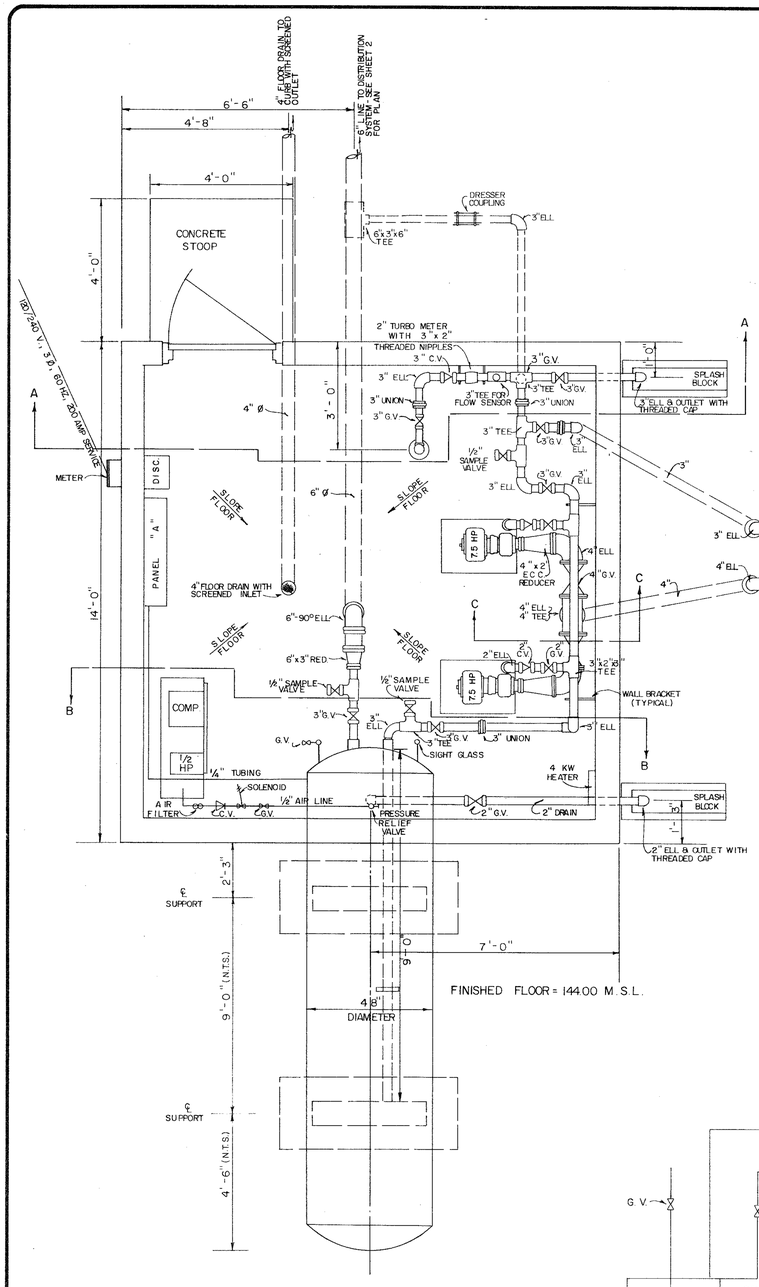

PUMP HOUSE
PLAN VIEW

SCALE: 1/2" = 1'-0"

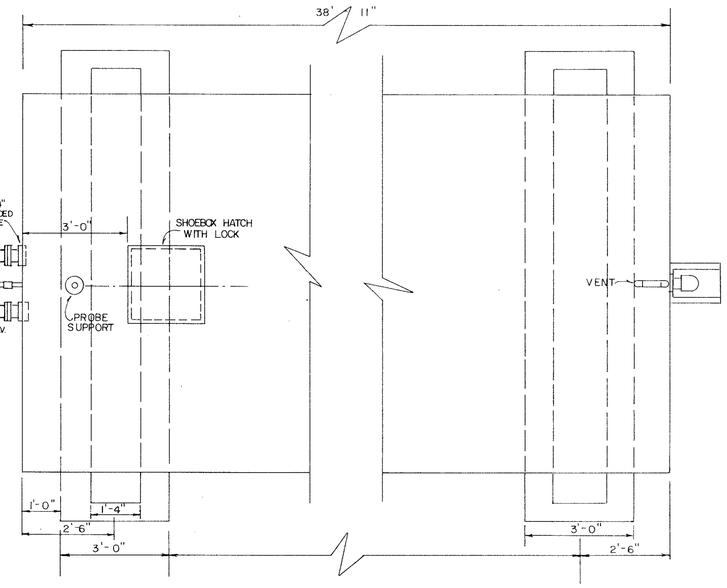

STORAGE TANK
PLAN VIEW

SCALE: 1/2" = 1'-0"

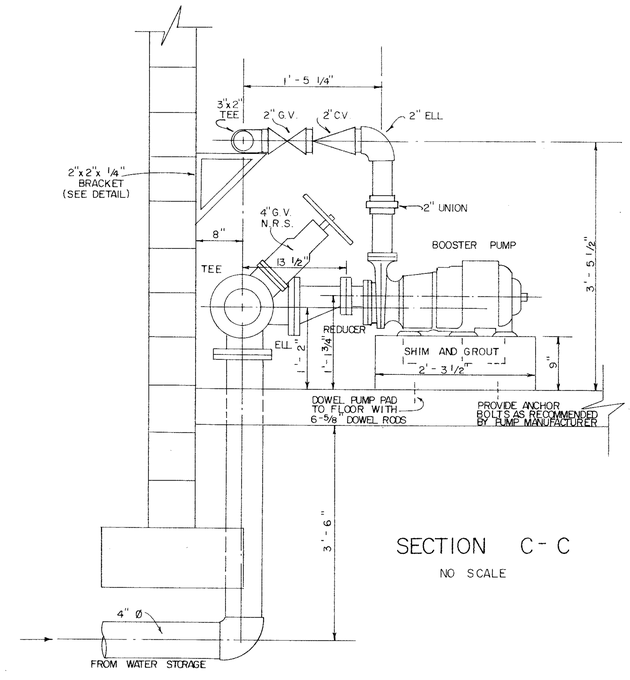

SECTION C-C

NO SCALE

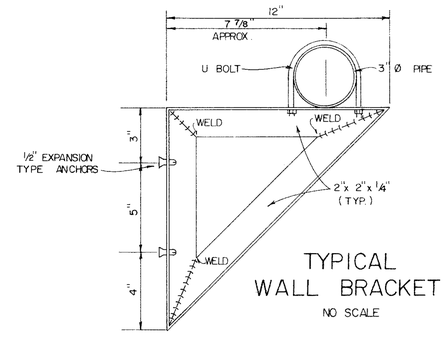

TYPICAL
WALL BRACKET

NO SCALE

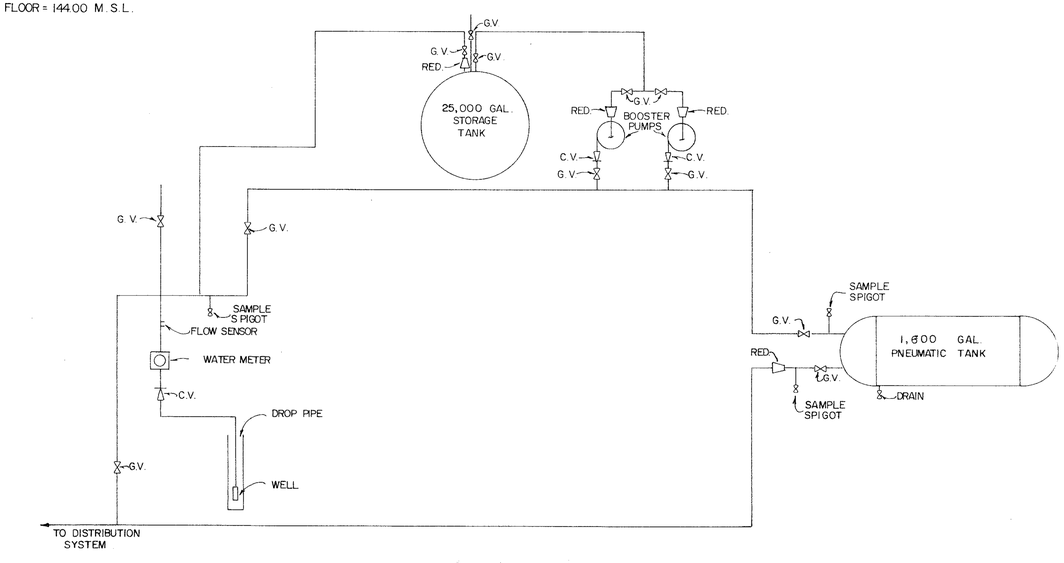

WATER [illegible] IC

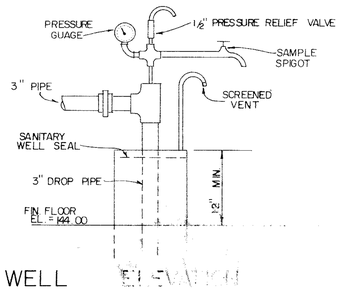

WELL [illegible]

NO SCALE

FINAL

CHARLES C. TOWNES & ASSOCIATES
Engineers, Planners, Land Surveyors
110 Norfolk Ave., P.O. Box 97
Colonial Heights, Va. 23834
804-526-6766

CENTRAL WATER SYSTEM
CEDARWOOD
SECTIONS ONE & TWO
RIVES DISTRICT
PRINCE GEORGE COUNTY, VIRGINIA

PUMP HOUSE PLAN AND DETAILS

REVISIONS	
DATE	ITEM
9-9-88	
9-19-88	

DATE	MAY 2, 1988
SCALE	AS SHOWN
DRAWN BY	HJH
CHECKED BY	
F.B. #	
SHEET #	9