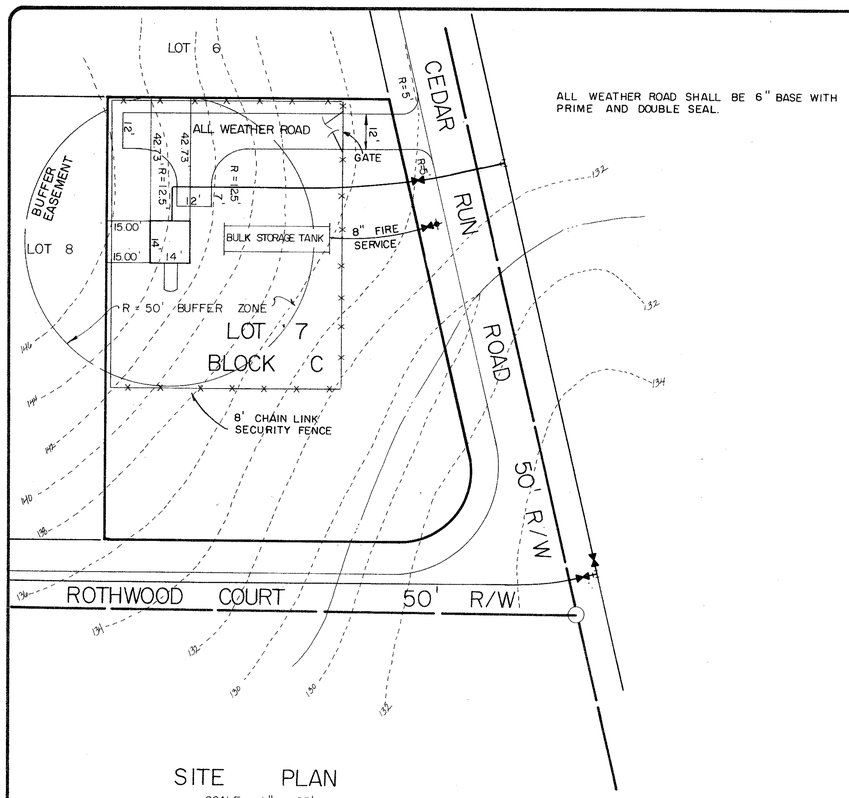

ALL WEATHER ROAD SHALL BE 6" BASE WITH PRIME AND DOUBLE SEAL.

SITE PLAN

SCALE : 1" = 25'

NOTE: NO PESTICIDES OR INSECTICIDES SHALL BE USED WITHIN THE 50' BUFFER ZONE

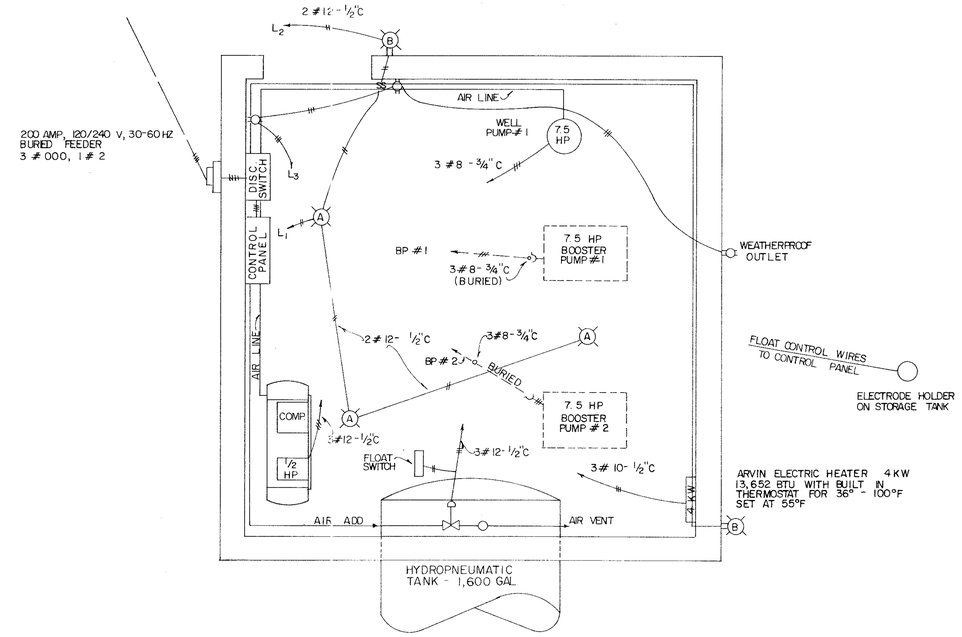

ELECTRICAL - PUMP HOUSE

SCALE : 1/2" = 1'-0"

NOTE:

WHEN SECOND WELL IS CONSTRUCTED, STARTING CONTROL SHALL ALTERNATE BETWEEN THE TWO BOOSTER PUMPS AND THE REMOTE WELL. AN ADDITIONAL BOOSTER PUMP SHALL START SHOULD THE LEAD PUMP FAIL TO START OR IF PRESSURE FALLS BELOW 35 PSI.

ELECTRICAL NOTES

1. ALL EQUIPMENT SHALL BE GROUNDED ACCORDING TO THE NATIONAL ELECTRIC CODE.
2. THE LOCATION OF LIGHT FIXTURES MAY BE REASONABLY MOVED TO ACCOMODATE INSTALLATION.
3. ALL INSTALLATIONS SHALL CONFORM TO THE NATIONAL ELECTRIC CODE AND APPLICABLE CODES.
4. CONDUIT RUNS ARE SHOWN IN GENERAL. THE DRAWINGS ARE DIAGRAMMATIC ONLY, EXCEPT WHERE SPECIFICALLY DIMENSIONED ALL WORK SHALL BE ACCURATELY LAID OUT IN COOPERATION WITH OTHER TRADES TO AVOID CONFLICTS AND MAINTAIN MAXIMUM ACCESSIBILITY AND HEADROOM.

WELL PUMP CONTROL

1. LEVEL IN WATER STORAGE TANK CONTROLS THE SUBMERSIBLE WELL PUMP TO MAINTAIN LIQUID LEVEL IN STORAGE TANK. WELL PUMP #2 WILL BE CONTROLLED BY A LOCAL PRESSURE SWITCH SET TO START AT 40 PSI AND STOP AT 60 PSI.
2. WELL PUMP HAS LOW LEVEL CUT-OFF AND RESTORE ELECTRODES WHICH WILL PREVENT WELL PUMP OPERATION IF DRAWDOWN FALLS TO 140' DEPTH. NO. 1 PUMP RESTORE IS SET AT 127'. WELL PUMP NO. 2 WILL HAVE LOW LEVEL CUT-OFF AND RESTORE PROBES WHICH WILL PREVENT WELL PUMP OPERATION. NO. 2 WELL PUMP DATA WILL BE PROVIDED AFTER WELL CONSTRUCTION AND TESTING (PHASE II).
3. ALL PROBES ARE TO HAVE SOLID ROD ELECTRODES.

HYDROPNEUMATIC TANK CONTROL

1. BOOSTER PUMP OPERATION IS CONTROLLED BY PRESSURE SWITCH ON THE HYDROPNEUMATIC TANK. THE FLOAT SWITCH STOPS THE PUMP AT HIGH WATER LEVEL. THE PRESSURE SWITCH ADDS AIR TO RESTORE THE SYSTEM PRESSURE TO 60 P.S.I.G.
2. BOOSTER PUMP START-STOP IS AUTOMATICALLY ALTERNATED EACH PUMP CYCLE. BOOTH BOOSTER PUMPS WILL OPERATE IF SYSTEM PRESSURE FALLS BELOW 25 P.S.I.G.
3. THE PRESSURE SWITCH ON RECEIVER WILL CONTROL THE COMPRESSOR OPERATION.
4. BOOSTER PUMP OPERATION WILL BE CONTROLLED BY LOW LEVEL FLOATS IN THE WATER STORAGE TANK WHICH WILL CUT OFF AND RESTORE BOOSTER PUMPS.

LIGHTING SCHEDULE

FIXTURE NO.	WATTS	STYLE	MANUFACTURER
A.	100	CEILING MOUNTED	KENALL
B.	100	MERCURY VAPOLET WALL MOUNTED, CAT. NO. IL 100-120	BENJAMIN

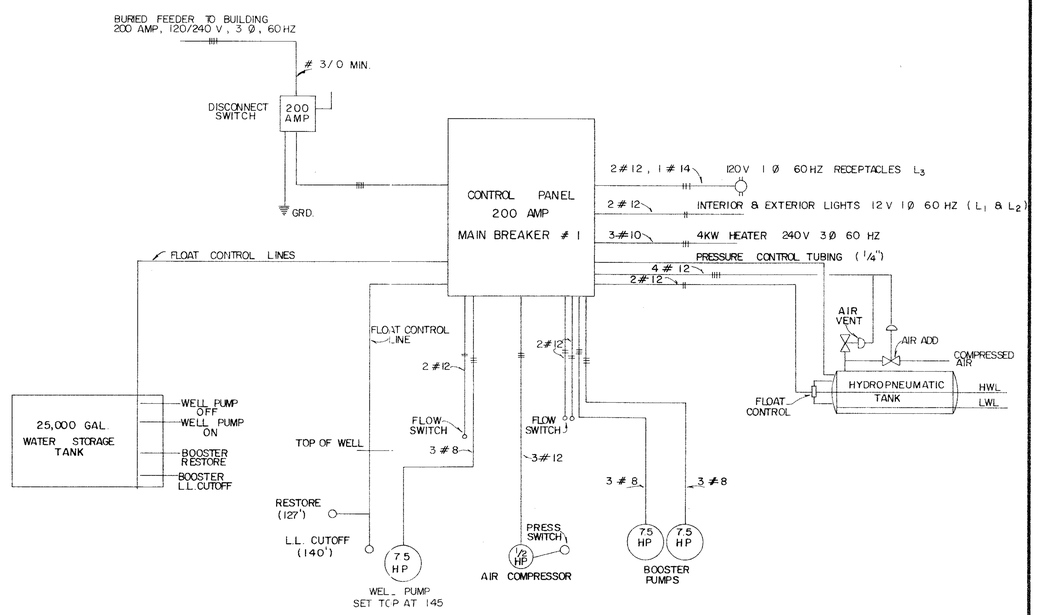

ELECTRICAL SCHEMATIC - PUMP HOUSE

NO SCALE

FINAL

CHARLES C. TOWNES & ASSOCIATES
Engineers, Planners, Land Surveyors
110 Norfolk Ave., P.O. Box 97
Colonial Heights, Va. 23834
804-526-6766

CENTRAL WATER SYSTEM
CEDARWOOD
SECTIONS ONE & TWO
RIVES DISTRICT
PRINCE GEORGE COUNTY, VIRGINIA

SITE PLAN AND ELECTRICAL LAYOUT

REVISIONS

DATE	ITEM
9-9-88	
9-19-88	

DATE
MAY 2, 1988

SCALE
AS SHOWN

DRAWN BY
HJH

CHECKED BY

F.B. #

SHEET #
12