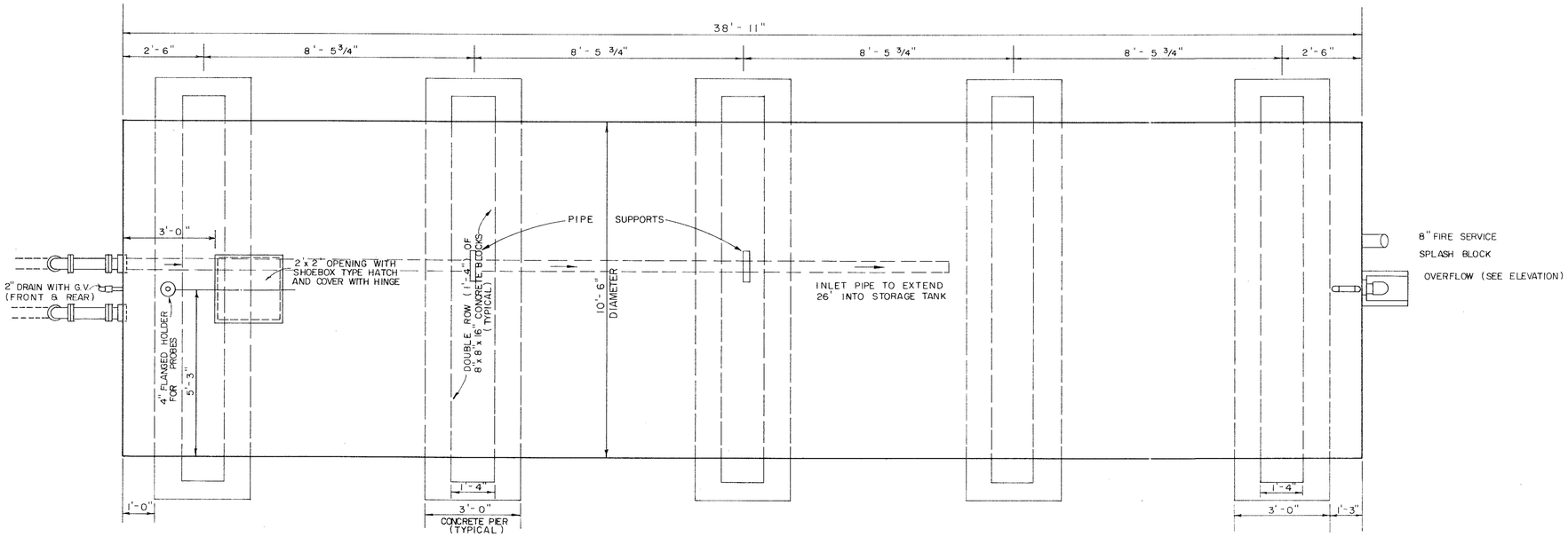


STORAGE TANK - PLAN VIEW

SCALE : 1/2" = 1'-0"

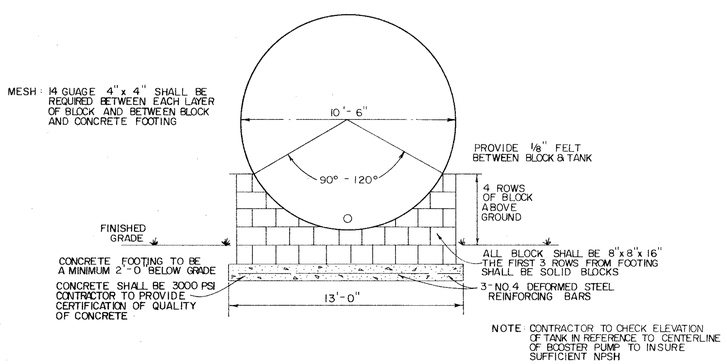


STORAGE TANK SUPPORT DETAIL

SCALE: 1/4" = 1'-0"

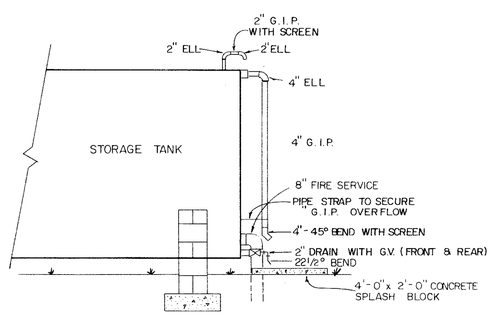


STORAGE TANK REAR ELEVATION

SCALE: 1/4" = 1'-0"

## NOTES

1. INSULATE ALL EXPOSED PIPING FOR FREEZE PROTECTION.
2. ALL FITTINGS SHALL BE DUCTILE IRON - APPROVED BY PRINCE GEORGE COUNTY
3. ALL PIERS SHALL HAVE A DOUBLE ROW OF 8"x8"x16" BLOCKS. (SEE STORAGE TANK PLAN VIEW)
4. TANK SHALL BE SET ON A SMOOTH SURFACE.

FINAL


CHARLES C. TOWNES & ASSOCIATES
Engineers, Planners, Land Surveyors
110 Norfolk Ave., P.O. Box 97
Colonial Heights, Va. 23834
804-526-6766


CENTRAL WATER SYSTEM
CEDARWOOD
SECTIONS ONE & TWO
RIVES DISTRICT
PRINCE GEORGE COUNTY, VIRGINIA

STORAGE TANK PLAN AND DETAILS

| REVISIONS | |
|---|---|
| DATE | ITEM |
| 9-9-88 | |

DATE: MAY 2, 1988

SCALE: AS SHOWN

DRAWN BY: HJH

CHECKED BY:

F.B. #:

SHEET #: 11