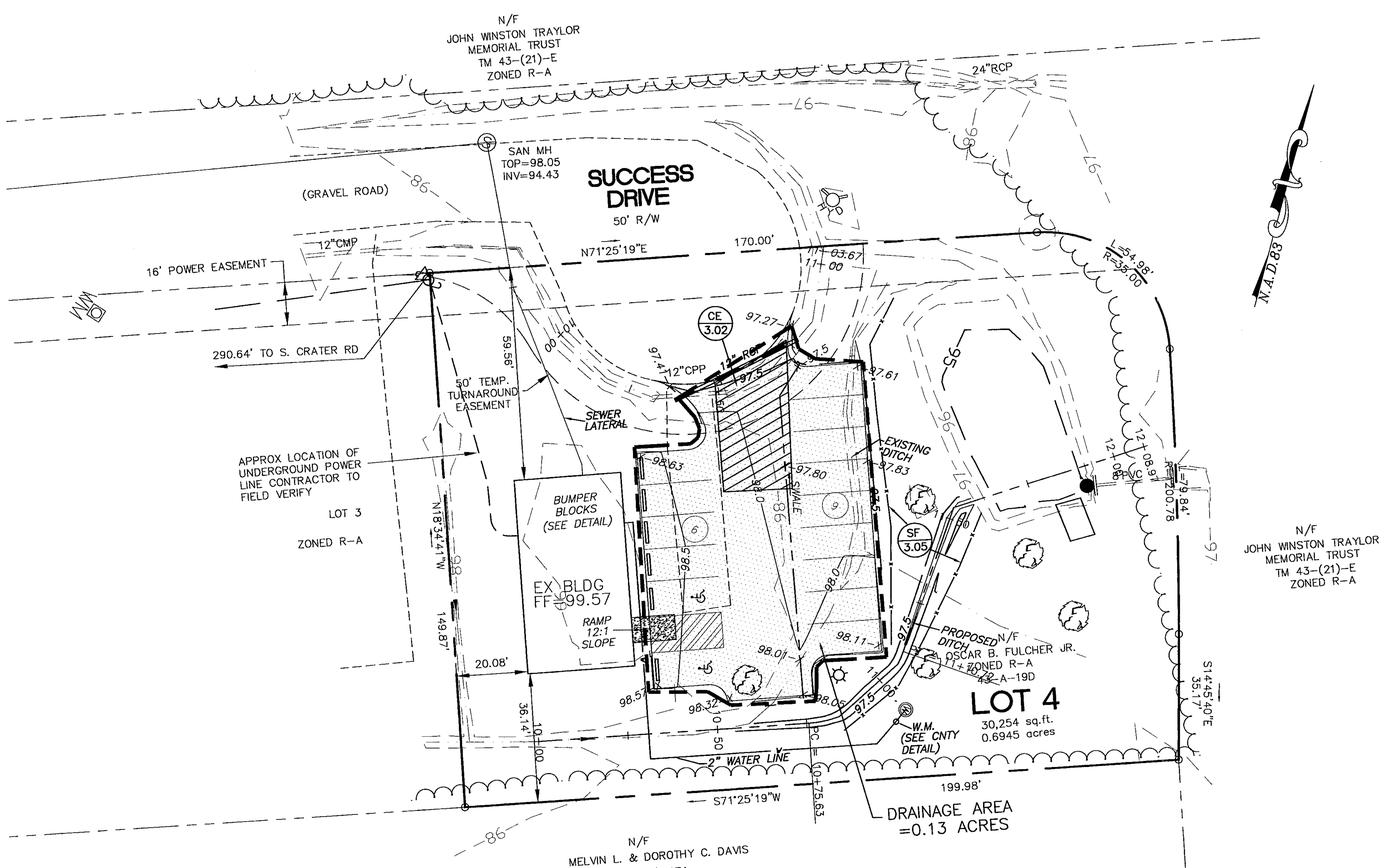

EROSION CONTROL PLAN

SCALE 1" = 30'

NOTE: CONTRACTOR SHALL KEEP EXISTING ROADS FREE OF SOIL BUILDUP AT ALL TIMES.

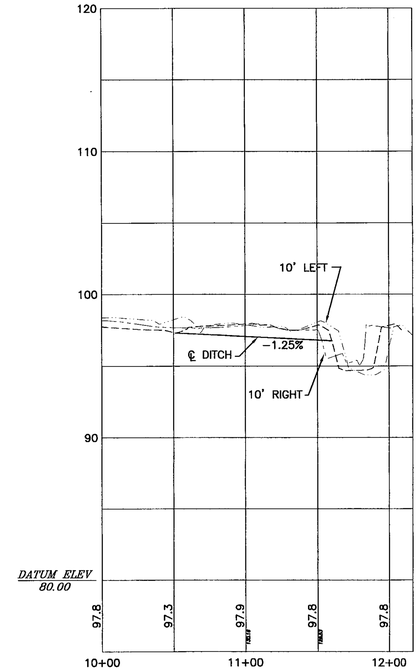

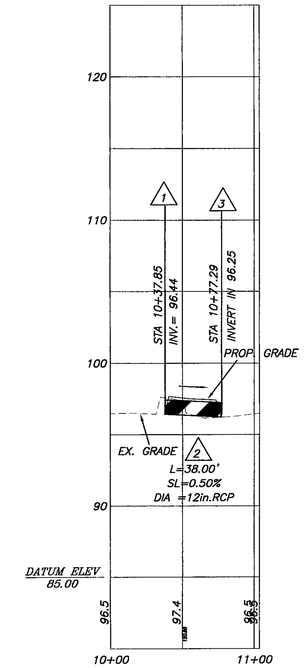

HORIZONTAL
GRAPHIC SCALE

50 0 25 50 100 200

(IN FEET)
1 inch = 50 ft.

VERTICAL
GRAPHIC SCALE

5 0 3 5 10 20

(IN FEET)
1 inch = 5 ft.

EROSION CONTROL LEGEND

SF 3.05	SILT FENCE
CE 3.02	TEMPORARY CONSTRUCTION ENTRANCE

PROJECT DESRIPTION:
IS TO TURN AN EXISTING BUILDING PREVIOUSLY BEING USED AS A STORAGE BUILDING INTO A CHURCH AND TO ADD A PARKING LOT TO ACOMODATE THE PATRONAGE OF THE CHURCH.

EXISTING SITE CONDITIONS ARE AS SHOWN ON PLANS CLEARED LOT WITH EXISTING BUILDING AND WELL.

CONSTRUCTION SEQUENCE NARRATIVE

THE CONTRACTOR SHALL PROVIDE THE COUNTY INSPECTOR 48 HOUR NOTIFICATION TO SCHEDULE AN ON-SITE PRE-CONSTRUCTION MEETING FOR THE ISSUANCE OF A LAND DISTURBANCE PERMIT.

1. INSTALL CONSTRUCTION ENTRANCE AS SHOWN ON THE PLANS. THE CONTRACTOR SHOULD NOTE THAT ALL CONSTRUCTION TRAFFIC MUST ENTER OFF SUCCESS DRIVE.
2. CONTRACTOR SHALL INSTALL SILT FENCE AS SHOWN ON THE PLANS.
3. ALL RUNOFF SHOULD BE DIRECTED TO THE EXISTING SWM/BMP BY THE EXIST. DITCHES AND SILT FENCE/EROSION CONTROL MEASURES.
4. CONTRACTOR MAY BEGIN SANITARY SEWER INSTALLATION ONCE SITE HAS BEEN CLEARED.
5. SITE GRADING OPERATIONS SHALL BEGIN.
6. INSTALL WATER AND SANITARY SEWER LINES TO EXISTING BUILDING.
7. INSTALL ASPHAULT PARKING AREA.
8. PLACE TOPSOIL AND SEED TO PROVIDE STABILIZATION AS SOON AS POSSIBLE.
9. PLACE STONE AND BASE MIX (BM-25.0) ASPHALT.
10. CONTRACTOR SHALL PLACE SURFACE MIX (SM-9.5A) OF ASHPALT ONLY AFTER SITE STABILIZATION HAS BEEN ACHIEVED.

12. A SURFACE MIX (SM-9.5A) OVERLAY ON PARKING LOT
13. THE CONTRACTOR SHALL INSPECT ALL EROSION CONTROL MEASURES PERIODICALLY AND AFTER EACH RUNOFF PRODUCING RAINFALL EVENT. ANY NECESSARY REPAIRS OR CLEANUP TO MAINTAIN THE EFFECTIVENESS OF THE EROSION CONTROL DEVICES SHALL BE MADE IMMEDIATELY.
14. ALL DISTURBED AREAS ARE TO DRAIN TO AN APPROVED SEDIMENT CONTROL MEASURES AT ALL TIMES DURING LAND DISTURBING ACTIVITIES AND DURING SITE DEVELOPMENT UNTIL FINAL STABILIZATION IS ACHIEVED.
15. THE CONTRACTOR IS RESPONSIBLE FOR THE INSTALLATION OF ANY ADDITIONAL EROSION CONTROL MEASURES NECESSARY TO PREVENT EROSION SEDIMENTATION AS DETERMINED BY THE CHESTERFIELD COUNTY ENGINEERING DEPARTMENT.

CONSTRUCTION OF A SILT FENCE (WITH WIRE SUPPORT)

1. SET POSTS AND EXCAVATE A 4"X4" TRENCH UPSLOPE ALONG THE LINE OF POSTS.
2. STAPLE WIRE FENCING TO THE POSTS.
3. ATTACH THE FILTER FABRIC TO THE WIRE FENCE AND EXTEND IT INTO THE TRENCH.
4. BACKFILL AND COMPACT THE EXCAVATED SOIL.

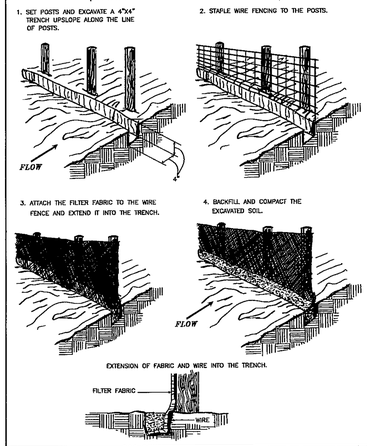

SOURCE: Adapted from Installation of Straw and Fabric Filter Barriers for Sediment Control, Sherwood & Ryan FIGURE 3.05-1

STONE CONSTRUCTION ENTRANCE

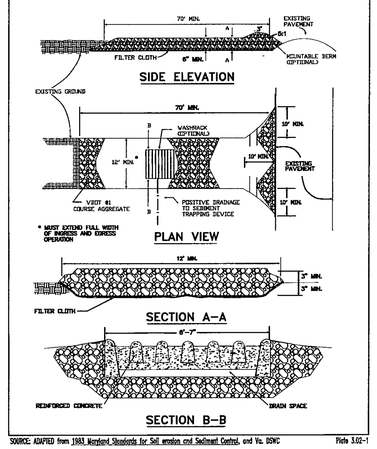

SOURCE: ADAPTED from 1983 Maryland Standards for Soil erosion and Sediment Control, and Va. DSWC Plate 3.02-1

NOTE: CONTRACTOR SHALL KEEP EXISTING ROADS FREE OF SOIL BUILDUP AT ALL TIMES.

KEVIN L. FLOYD, P.E., L.S.
P.O. BOX 1178
Chesterfield, Virginia 23832
Phone : (804) 778-4518

BREAD of LIFE CHRISTIAN CHURCH

RIVES DISTRICT
PRINCE GEORGE COUNTY, VIRGINIA

EROSION CONTROL PLAN/PROFILES

COMMONWEALTH OF VIRGINIA
KEVIN L. FLOYD
17553
PROFESSIONAL ENGINEER

REVISIONS

DATE	ITEM

SCALE:	
CHKED BY:	R.J.D.
DRWN BY:	R.J.D.
DATE:	12/29/05
JOB NO.	09-16005
SHEET #	C3