LEGEND

ROADS

- STORM PIPE & STRUCTURE NO.
- DROP INLET & STRUCTURE NO.
- CURB
- CURB & GUTTER
- DRY CURB & GUTTER
- PROPOSED PAVEMENT
- PAVED DITCH
- 9" DEPTH OF PAVED DITCH
- JUTE MESH OR SODDED DITCH
- 10" DEPTH OF JUTE MESH DITCH
- EARTH DITCH
- 24" DRIVEWAY CULVERT AND SIZE
- BENCH MARK
- CLEARING LIMITS
- SS VDOT STANDARD STOP SIGN
- 200 EXISTING CONTOUR
- 200 PROPOSED CONTOUR
- (240.5) EXISTING SPOT ELEVATION
- T/C 240.5 PROPOSED SPOT ELEVATION

SEWER

- EXISTING SANITARY SEWER
- PROPOSED SANITARY SEWER
- SEWER CONNECTIONS
- 3 7605.8 9378.25 M.H. NUMBER W/ STATION OR COORDINATE LOCATION

WATER

- EXISTING WATER LINE
- PROPOSED WATER LINE
- VALVE
- REDUCER
- PLUG
- CROSS
- TEE
- FIRE HYDRANT (COMPLETE)
- SINGLE SERVICE CONNECTION

EROSION CONTROL *

STB	STRAW BAIL BARRIER	1.05
TDD	TEMPORARY DIVERSION DIKE	1.15
TST	TEMP. SEDIMENT TRAP	1.25
SB	SILT BASIN	1.26
IP	INLET PROTECTION	1.08
SF	SILT FENCE	1.06
CE	CONSTRUCTION ENTRANCE	1.01

* VIRGINIA EROSION & SEDIMENT CONTROL HANDBOOK SPEC. NO.

1. OWNER AND DEVELOPER: BRANCHESTER ASSOCIATES
   C/O DONALD PARR
   701 NORTH BROADWAY
   HOPEWELL, VA. 23860
   PHONE: (804) 452-0505
2. ZONING: R-1 & R-2
3. NUMBER OF LOTS: 25
4. TAX MAP NUMBER: PART OF 13-(6) 2 & 3

SEWER AND WATER NOTES

1. ALL MATERIALS FOR SEWER AND WATER SYSTEMS SHOWN SHALL BE SUPPLIED AND INSTALLED IN ACCORDANCE WITH THE LATEST APPLICABLE SPECIFCATION OF PRINCE GEORGE COUNTY.
2. ALL WORK SHALL BE SUBJECT TO INSPECTION BY UTILITY DEPARTMENT OFFICIALS. THE CONTRACTOR SHALL BE RESPONSIBLE FOR NOTIFICATION OF APPROPRIATE COUNTY OFFICIALS 48 HOURS PRIOR TO START OF WORK.
3. MINIMUM CLEAR COVER FOR ALL WATER PIPE SHALL BE 3.5 FEET.
4. THE UTILITY CONTRACTOR IS RESPONSIBLE FOR OBTAINING ANY HIGHWAY PERMITS AND SEND A COPY TO THE COUNTY PRIOR TO START OF CONSTRUCTION.
5. ANY LOT WITH LESS THAN 50 FEET OF FRONTAGE SHALL HAVE FRONT CORNERS OR END OF 6' CONNECTION STAKED PRIOR TO CONSTRUCTION OF A 6' SEWER SERVICE.
6. SEWER PIPE SHALL BE PVC. ALL SEWER JOINTS SHALL BE CLASS A. BEDDING SHALL BE CLASS B MINIMUM; BEDDING SHALL BE AS SHOWN IN DETAIL ON SHEET 1 OF 4.
7. SEWER GRADES ARE BASED ON U.S.C. AND G. S. DATUM.
8. CONTRACTOR SHALL INSTALL 6" SEWER SERVICE CONNECTIONS TO ALL LOTS (R/W LINE OR EDGE OF EASEMENT) AS SHOWN.
9. ALL WATER SERVICES ARE TO BE COPPER, TYPE K, DRAWN TUBIMG.
10. THE CONTRACTOR WILL INSTALL ALL WATER CONNECTIONS AND METER BOXES.
11. FIRE HYDRANT PUMPER CONNECTIONS SHALL FACE IN THE DIRECTION OF THE ARROW.
12. THE EXACT MANHOLE TOP SHALL BE ON THE SAME GRADE AS THE FINISHED ROAD GRADE AND AS NOTED ON SEWER CUT SHEETS.
13. BACKFILL FOR ALL UTILITIES WITHIN PROPOSED SUBDIVISION STREETS SHALL BE PLACED GENERALLY IN ACCORDANCE WITH PRINCE GEORGE COUNTY SPEOIFICATIONS, AND THE FOLLOWING CRITERIA: (1.) NO TRENCH SHALL BE BACKFILLED UNTIL AUTHORIZED BY THE COUNTY. MATERIALS USED FOR BACKFILL FROM THE BOTTOM OF THE TRENCH TO 12" (TWELVE INCHES) ABOVE THE PIPE SHALL BE SELECT MATERIAL, FREE FROM FROST, LARGE CLODS, STONES AND DEBRIS, AND SHALL BE THOROUGHLY AND CAREFULLY COMPACTED.. 2. BACKFILL SHALL BE COMPACTED BY MECHANICAL TAMPING THROUGHOUT THE DEPTH OF THE TRENCH TO INSURE A SUITABLE SUBBASE, ACCEPTABLE TO THE ROAD ENGINEER, IF THE MATERIAL IS TAKEN FROM THE DITCH IS NOT SUITABLE FOR BACKFILLING IT SHALL BE REMOVED AND ACCEPTABLE MATERIAL USED FOR BACKFILLING THE TRENCH.
14. THE ENGINEER WILL CERTIFY THAT THE ROADS ARE WITHIN 6" OF SUBGRADE BEFORE WATERLINE CONSTRUCTION CAN BEGIN.
15. FOR SEWER AND WATER INSTALLATION WITHIN EXISTING VDOT R/W; UTILITY CONTRACTORS MUST NOTIFY VDOT WHEN INSTALLATION BEGINS SO THAT DENSITY CAN BE TESTED (95% @ OPTIMUM MOISTURE +20%).
16. CONTRACTOR SHALL VERIFY LOCATION AND ELEVATION OF ALL UNDERGROUND UTILITIES SHOWN ON THE PLANS IN AREAS OF CONSTRUCTION PRIOR TO STARTING WORK. CONTACT ENGINEER IMMEDIATELY, IF: LOCATION OR ELEVATION IS DIFFERENT FROM THAT SHOWN ON THE PLAN, OR IF: THERE APPEARS TO BE A CONFLICT, AND UPON DISCOVERY OF ANY UTILITY NOT SHOWN ON THE PLAN. TO MISS THE UTILITY CALL "MISS UTILITY" OF CENTRAL VIRGINIA: 1-800-552-7001 (TOLL FREE).
17. THE INSTALLATION OF BACK FLOW DEVICE IS REQUIRED IN ALL HOUSES WHERE THE FINISHED FLOOR ELEVATION IS LOWER THAN UPGRADE MANHOLES. THIS DEVICE WILL BE INSPECTED BY THE COUNTY BUILDING INSPECTOR.
18. INDIVIDUAL WATER SERVICES TO BE 3/4".
19. ALL WATERLINE VALVES MUST BE LOCATED ON THE TEE OR CROSS WHEN APPLICABLE.
20. ALL MANHOLES IN UTILITY EASEMENTS ARE TO HAVE THE CONCRETE SECTION EXTENDED ONE FOOT ABOVE THE GROUND.
21. USE OF HEIGHT ADJUSTMENT RINGS WILL NOT BE ALLOWED EXCEPT UNDER PAVED SURFACES WHERE A MAXIMUM OF ONE RING IS PERMITTED.
22. A SMOOTH TRANSITION OF DROP MANHOLE MUST BE PROVIDED FOR EACH LATERAL OR SANITARY SEWER ENTERING A SANITARY MANHOLE.

EROSION CONTROL NOTES

1. ALL DISTURBED AREAS TO BE SEEDED WITHIN 15 DAYS AFTER ROUGH GRADING IS COMPLETED.
2. ALL STREETS WILL BE STABILIZED WITH BASE STONE WITHIN 30 DAYS AFTER FINAL GRADING.
3. THE PRINCE GEORGE ENGINEERING OFFICE WILL BE NOTIFIED 24 HOURS IN ADVANCE OF ANY PLANS TO BEGIN CLEARING AND GRADING OPERATIONS.
4. THE PRINCE GEORGE COUNTY ENVIRONMENTAL ENGINEERING DEPARTMENT AND ALL OTHER INTERESTED COUNTY AGENCIES SHALL MAKE A CONTINUING REVIEW AND EVALUATION OF THE METHOD USED AND THE OVERALL EFFECTIVENESS OF THE EROSION AND SEDIMENT CONTROL PROGRAM. AN APPROVED EROSION AND SEDIMENT CONTROL PLAN MAY BE AMENDED BY THE PLAN APPROVING AUTHORITY IF ON SITE INSPECTION INDICATES THAT THE APPROVED CONTROL MEASURES ARE NOT EFFECTIVE IN CONTROLLING EROSION AND SEDIMENTATION OR BECAUSE OF CHANGED CIRCUMSTANCES THE APPROVED PLAN CANNOT BE CARRIED OUT.

GENERAL NOTES

1. JANUARY 1, 1989 EDITION OF ROAD AND BRIDGE SPECIFICATIONS AND JANUARY 1, 1989 EDITION OF THE ROAD DESIGNS AND STANDARDS OF THE VIRGINIA DEPARTMENT OF HIGHWAYS SHALL GOVERN THE FOLLOWING:
   A. POURING, CURING, FORMS, WORKMANSHIP, ETC. OF ALL CONCRETE USED ON THIS PROJECT.
   B. STABILIZED BASE COURSE MATERIAL.
   C. MATERIALS AND INSTALLATION OF ALL PIPE CULVERTS.
2. VDOT AND COUNTY APPROVAL OF SUBDIVISION ROAD PLANS DOES NOT PRECLUDE THE RIGHT TO ADDITIONAL FACILITIES SUCH AS SEEDING, PAVING, SILT DAMS, ETC. AS MAY BE DEEMED NECESSARY BY EITHER AUTHORITY PRIOR TO THE THE ACCEPTANCE OF SUCH ROADS IN ORDER TO LIMIT SILTATION AND POLLUTION OF NEARBY LAKES, PONDS, STREAMS AND ADJACENT PROPERTY.
3. THE VDOT APPROVAL OF THESE PLANS WILL EXPIRE THREE (3) YEARS FROM DATE OF APPROVAL.
4. OWNER WILL FURNISH SURVEY CONTROL OFF SET HUBS FOR ALL ROADS AND EASEMENTS FOR ALIGNMENT AND GRADE. ROADS WILL BE STAKED ON ONLY ONE SIDE. REPLACEMENT OF THESE HUBS AND ANY OTHER STAKING WILL BE DONE BY THE CONTRACTOR AT HIS EXPENSE. THE CONTRACTOR SHALL INSPECT THE CONTROL STAKING MENTIONED ABOVE AND VERIFY BEFORE CONSTRUCTION.
5. ALL GRADE STAKES DESTROYED BY THE CONTRACTOR, SHALL BE REPLACED AT HIS EXPENSE.
6. IT SHALL BE THE RESPONSIBILITY OF THE CONTRACTOR TO PRESERVE THE EXISTING RIGHT OF WAY STONES. ANY MARKERS DAMAGED SHALL BE REPLACED AT HIS EXPENSE.
7. CLEARING AND GRUBBING SHALL BE COMPLETE WITHIN THE RIGHT OF WAYS AS INDICATED ON LAYOUT PLAN.
8. ALL DRAINAGE EASEMENTS TO BE CLEARED, GRUBBED, AND GRADED TO CONTAIN WATER FROM PIPE CULVERTS AND TO EXTEND TO A NATURAL WATERCOURSE.
9. EXCESS EXCAVATION TO BE DISPOSED OF AS DIRECTED BY THE ENGINEER.
10. ALL FILLETS AT INTERSECTIONS TO HAVE 35' RADII UNLESS OTHERWISE NOTED.
11. GRADE LINES ON PROFILES DENOTE FINISHED GRADE OF CENTER LINE OF ROAD.
12. BASE MUST BE APPROVED BY VDOT FOR DEPTH, TEMPLATE, AND COMPACTION BEFORE SURFACE TREATMENT IS APPLIED.
13. SLOPE EASEMENTS FOR FILL SLOPES ARE REQUIRED WHERE SLOPES EXCEED PROPOSED RIGHT-OF-WAY LIMITS SHOWN.
14. PERMIT TO TIE INTO EXISTING ROADS, SHALL BE OBTAINED FROM RESIDENT ENGINEER PRIOR TO ROAD CONSTRUCTION.
15. ALL APPROACH GUTTERS TO SAG INLETS SHALL MAINTAIN A MINIMUM SLOPE OF 0.004 ft/ft.
16. PRIME COAT MUST BE APPLIED TO ROAD BASE AGGREGATE PRIOR TO APPLICATION OF ASPHALT SURFACE (PRIME COAT RC-250, 0.3 GALLONS PER SQUARE YARD).
17. ALL UTILITIES TO BE IN PLACE PRIOR TO LAYING BASE MATERIAL.

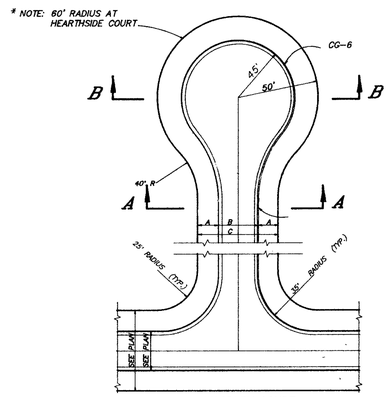

WOODLEY COURT
* HEARTHSIDE COURT

CUL DE SAC PLAN

NO SCALE

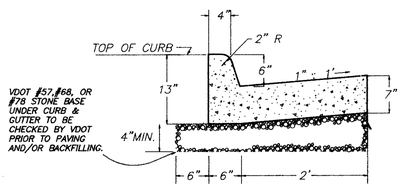

VDOT STANDARD CG-6

NO SCALE

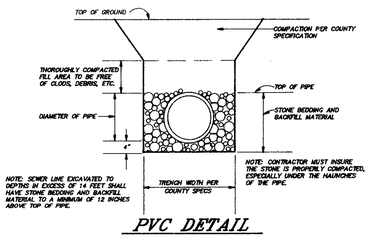

PVC DETAIL

SANITARY SEWER BEDDING AND BACKFILL
DETAIL FOR PLASTIC PIPE
NO SCALE

CERTIFICATION

I, WE HEREBY CERTIFY THAT THE LOT LINES, LOT NUMBERS, BLOCK NUMBERS AND THE STREET NAMES SHOWN ON THESE PLANS ARE IDENTICAL TO THOSE SHOWN ON THE OFFICIAL RECORDED PLAT, AND NO CHANGES WILL BE MADE WITHOUT PRIOR APPROVAL FROM THE UTILITY DEPARTMENT. IF ANY CHANGES ARE APPROVED, REVISED WATER AND/OR SEWER PLANS WILL BE SUBMITTED WITHIN 48 HOURS AFTER APPROVAL.

ENGINEER

WATERLINE NARRATIVE

740 LF OF 8" W/L FROM A EXISTING 10"x8" REDUCER AT STA. 43+60 BRANCHESTER PARKWAY TO A 10"x8" REDUCER AT STA. 50+80 BRANCHESTER PARKWAY.

500 LF OF 6" W/L FROM AN EXISTING PLUG AT STA. 0+70 FOX DRIVE TO A PLUG AT STA. 5+70 FOX DRIVE.

270 LF OF 6" W/L FROM THE INTERSECTION OF WOODLEY COURT AND BRANCHESTER PARKWAY TO A PLUG AT STA. 7+71 WOODLEY COURT.

160 LF OF 6" W/L FROM A 10"x6" REDUCER AT INTERSECTION OF HEARTHSIDE COURT & BRANCHESTER PARKWAY TO STA. 34+22 HEARTHSIDE COURT.

45 LF OF 10" W/L FROM THE INTERSECTION OF HEARTHSIDE COURT AND BRANCHESTER PARKWAY TO A PLUG AT STA. BRANCHESTER PARKWAY.

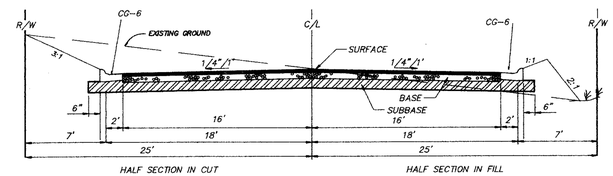

SECTION A-A

NO SCALE

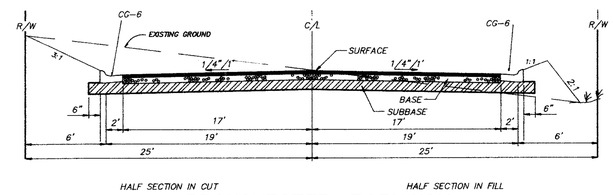

BRANCHESTER PARKWAY

STA. 42+90 TO STA. 50+73

NO SCALE

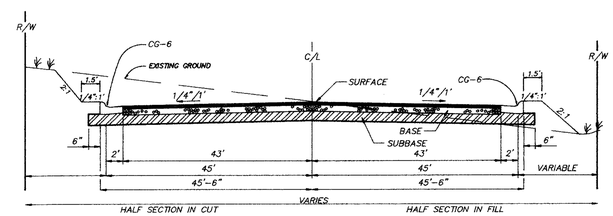

SECTION B-B

NO SCALE

NOTE: VDOT STANDARD CD-1 & CD-2 UNDERDRAINS SHALL BE INSTALLED WHERE REQUIRED BY THE COUNTY ENGINEER.

FINAL

ROAD CLASSIFICATIONS

ROAD STA. TO STA.	VPD	CATEGORY	PAVEMENT DESIGN (1) (2) SUBBASE	BASE	SURFACE	PVM'T. WIDTH (C/L - E/P)	C/L - F/C	C/L - B/C	R/W WIDTH
BRANCHESTER PARKWAY STA 42+90 TO STA 50+73	1585	IV	6" SELECT TYPE I OR III	6" 21-B	2" SM-3A	17'	19'	19'-6"	50'
FOX DRIVE STA. 0+00 TO STA. 4+80	240	I		6" 21-A	1-1/2" SM3A	16'	18'	18'-6"	50'
WOODLEY COURT STA. 5+00 TO STA. 7+25	60	I		6" 21-A	1-1/2" SM3A	16'	18'	18'-6"	50'
HEARTHSIDE COURT STA. 32+42 TO STA. 33+72	50	I		6" 21-A	1-1/2" SM3A	16'	18'	18'-6"	50'

(1) MINIMUM PAVEMENT DESIGN IS BASED ON A MINIMUM CBR VALUE OF 10. PAVEMENT DESIGN MAY BE REVISED DUE TO SOIL CONDITIONS AT TIME OF CONSTRUCTION.
(2) A TACK COAT SHALL BE APPLIED BETWEEN THE AGGREGATE BASE AND ASPHALT COURSES IN ACCORDANCE WITH V.D.O.T. STANDARDS.

711 NORTH COURTHOUSE ROAD
RICHMOND, VIRGINIA 23236
TELEPHONE: (804) 794-3500

8803 STAPLES MILL ROAD
RICHMOND, VIRGINIA 23228
TELEPHONE: (804) 262-7396

4411 CROSSING BOULEVARD
PRINCE GEORGE, VIRGINIA 23875
TELEPHONE: (804) 458-8685

PLANNERS * LANDSCAPE ARCHITECTS * SURVEYORS * ARCHITECTS * ENGINEERS

COMMONWEALTH OF VIRGINIA
EDWARD L. GLASS
No. 17564
PROFESSIONAL ENGINEER

DATE	COUNTY REVISIONS	REVISION DESCRIPTION
1-7-92		

DATE 11-22-91

DRAWN BY B.R.G.

DESIGNED BY D.A.J.

CHECKED BY E.L.G.

SCALE AS SHOWN

BRANCHESTER LAKES * SECTION 6

NOTES, QUANTITIES, & TYPICAL SECTIONS

SHEET NO. 1 OF 5

JOB NO. 14810