LEGEND

ROADS

- STORM PIPE & STRUCTURE NO.
- DROP INLET & STRUCTURE NO.
- CURB
- CURB & GUTTER
- DRY CURB & GUTTER
- PROPOSED PAVEMENT
- PAVED DITCH
- 9" — DEPTH OF PAVED DITCH
- JUTE MESH OR SODDED DITCH
- 10" — DEPTH OF JUTE MESH DITCH
- EARTH DITCH
- 24" — DRIVEWAY CULVERT AND SIZE
- BENCH MARK
- CLEARING LIMITS
- SS — VDOT STANDARD STOP SIGN
- 200 — EXISTING CONTOUR
- 200 — PROPOSED CONTOUR
- (240.5) — EXISTING SPOT ELEVATION
- T/C 240.5 — PROPOSED SPOT ELEVATION

SEWER

- EXISTING SANITARY SEWER
- PROPOSED SANITARY SEWER
- SEWER CONNECTIONS
- 3 7605.8 9378.25 — M.H. NUMBER W/ STATION OR COORDINATE LOCATION

WATER

- EXISTING WATER LINE
- PROPOSED WATER LINE
- VALVE
- REDUCER
- PLUG
- CROSS
- TEE
- FIRE HYDRANT (COMPLETE)
- SINGLE SERVICE CONNECTION

EROSION CONTROL

		*
STB	STRAW BAIL BARRIER	3.04
DD	TEMPORARY DIVERSION DIKE	3.09
ST	TEMPORARY SEDIMENT TRAP	3.13
SB	SEDIMENT BASIN	3.14
IP	INLET PROTECTION	3.07
SF	SILT FENCE	3.05
CE	CONSTRUCTION ENTRANCE	3.02
CD	CHECK DAM	3.20
CIP	CULVERT INLET PROTECTION	3.08

* VIRGINIA EROSION & SEDIMENT CONTROL HANDBOOK SPECIFICATION NUMBER

1. OWNER AND DEVELOPER: BRANCHESTER ASSOCIATES
   C/O DONALD PARR
   701 NORTH BROADWAY
   HOPEWELL, VA. 23860
   PHONE: (804) 452-0505
2. ZONING: R-1
3. NUMBER OF LOTS: 27
4. TAX MAP NUMBER: PART OF 13-(6) 2 & 3

SEWER AND WATER NOTES

1. ALL MATERIALS FOR SEWER AND WATER SYSTEMS SHOWN SHALL BE SUPPLIED AND INSTALLED IN ACCORDANCE WITH THE LATEST APPLICABLE SPECIFICATION OF PRINCE GEORGE COUNTY.
2. ALL WORK SHALL BE SUBJECT TO INSPECTION BY UTILITY DEPARTMENT OFFICIALS. THE CONTRACTOR SHALL BE RESPONSIBLE FOR NOTIFICATION OF APPROPRIATE COUNTY OFFICIALS 48 HOURS PRIOR TO START OF WORK.
3. MINIMUM CLEAR COVER FOR ALL WATER PIPE SHALL BE 3.5 FEET.
4. THE UTILITY CONTRACTOR IS RESPONSIBLE FOR OBTAINING ANY HIGHWAY PERMITS AND SEND A COPY TO THE COUNTY PRIOR TO START OF CONSTRUCTION.
5. ANY LOT WITH LESS THAN 50 FEET OF FRONTAGE SHALL HAVE FRONT CORNERS OR END OF 6' CONNECTION STAKED PRIOR TO CONSTRUCTION OF A 6' SEWER SERVICE.
6. SEWER PIPE SHALL BE PVC. ALL SEWER JOINTS SHALL BE CLASS A. BEDDING SHALL BE CLASS B MINIMUM; BEDDING SHALL BE AS SHOWN IN DETAIL ON SHEET 2 OF 6.
7. SEWER GRADES ARE BASED ON U.S.C. AND G. S. DATUM.
8. CONTRACTOR SHALL INSTALL 6" SEWER SERVICE CONNECTIONS TO ALL LOTS (R/W LINE OR EDGE OF EASEMENT) AS SHOWN.
9. ALL WATER SERVICES ARE TO BE COPPER, TYPE K, DRAWN TUBING.
10. THE CONTRACTOR WILL INSTALL ALL WATER CONNECTIONS AND METER BOXES.
11. FIRE HYDRANT PUMPER CONNECTIONS SHALL FACE IN THE DIRECTION OF THE ARROW.
12. THE EXACT MANHOLE TOP SHALL BE ON THE SAME GRADE AS THE FINISHED ROAD GRADE AND AS NOTED ON SEWER CUT SHEETS.
13. BACKFILL FOR ALL UTILITIES WITHIN PROPOSED SUBDIVISION STREETS SHALL BE PLACED GENERALLY IN ACCORDANCE WITH PRINCE GEORGE COUNTY SPECIFICATIONS, AND THE FOLLOWING CRITERIA: (1.) NO TRENCH SHALL BE BACKFILLED UNTIL AUTHORIZED BY THE COUNTY. MATERIALS USED FOR BACKFILL FROM THE BOTTOM OF THE TRENCH TO 12" (TWELVE INCHES) ABOVE THE PIPE SHALL BE SELECT MATERIAL, FREE FROM FROST, LARGE CLODS, STONES AND DEBRIS, AND SHALL BE THOROUGHLY AND CAREFULLY COMPACTED. 2. BACKFILL SHALL BE COMPACTED BY MECHANICAL TAMPING THROUGHOUT THE DEPTH OF THE TRENCH TO INSURE A SUITABLE SUBBASE, ACCEPTABLE TO THE ROAD ENGINEER. IF THE MATERIAL IS TAKEN FROM THE DITCH IS NOT SUITABLE FOR BACKFILLING IT SHALL BE REMOVED AND ACCEPTABLE MATERIAL USED FOR BACKFILLING THE TRENCH.
14. THE ENGINEER WILL CERTIFY THAT THE ROADS ARE WITHIN 6" OF SUBGRADE BEFORE WATERLINE CONSTRUCTION CAN BEGIN.
15. FOR SEWER AND WATER INSTALLATION WITHIN EXISTING VDOT R/W, UTILITY CONTRACTORS MUST NOTIFY VDOT WHEN INSTALLATION BEGINS SO THAT DENSITY CAN BE TESTED (95% @ OPTIMUM MOISTURE +20%).
16. CONTRACTOR SHALL VERIFY LOCATION AND ELEVATION OF ALL UNDERGROUND UTILITIES SHOWN ON THE PLANS IN AREAS OF CONSTRUCTION PRIOR TO STARTING WORK. CONTACT ENGINEER IMMEDIATELY, IF: LOCATION OR ELEVATION IS DIFFERENT FROM THAT SHOWN ON THE PLAN, OR IF: THERE APPEARS TO BE A CONFLICT, AND UPON DISCOVERY OF ANY UTILITY NOT SHOWN ON THE PLAN. TO MISS THE UTILITY CALL "MISS UTILITY" OF CENTRAL VIRGINIA: 1-800-552-7001 (TOLL FREE).
17. THE INSTALLATION OF BACK FLOW DEVICE IS REQUIRED IN ALL HOUSES WHERE THE FINISHED FLOOR ELEVATION IS LOWER THAN UPGRADE MANHOLES. THIS DEVICE WILL BE INSPECTED BY THE COUNTY BUILDING INSPECTOR.
18. INDIVIDUAL WATER SERVICES TO BE 3/4".
19. ALL WATERLINE VALVES MUST BE LOCATED ON THE TEE OR CROSS WHEN APPLICABLE.
20. ALL MANHOLES IN UTILITY EASEMENTS ARE TO HAVE THE CONCRETE SECTION EXTENDED ONE FOOT ABOVE THE GROUND.
21. USE OF HEIGHT ADJUSTMENT RINGS WILL NOT BE ALLOWED EXCEPT UNDER PAVED SURFACES WHERE A MAXIMUM OF ONE RING IS PERMITTED.
22. A SMOOTH TRANSITION OF DROP MANHOLE MUST BE PROVIDED FOR EACH LATERAL OR SANITARY SEWER ENTERING A SANITARY MANHOLE.
23. ALL FIRE HYDRANTS SHALL BE O.S.H.A. RED IN COLOR.
24. A "W" AND "S" SHALL BE STAMPED ON THE CURB WHILE THE CONCRETE IS STILL WET. THESE MARKS SHALL INDICATE THE ACTUAL LOCATION OF THE WATER AND SEWER CONNECTIONS FOR EACH LOT.
25. METER BOXES PROVIDED SHALL BE CAST IRON 12"x18"x24" HIGH WITH CAST IRON LIDS. THE METER ASSEMBLIES ARE TO BE SUPPLIED WITH NEPTUNE PROREAD ARB SYSTEMS ATTACHED TO THE LID. METERS ARE TO BE COMPATIBLE WITH THE PROPOSED SYSTEM.

EROSION CONTROL NOTES

1. ALL DISTURBED AREAS TO BE SEEDED WITHIN 15 DAYS AFTER ROUGH GRADING IS COMPLETED.
2. ALL STREETS WILL BE STABILIZED WITH BASE STONE WITHIN 30 DAYS AFTER FINAL GRADING.
3. THE PRINCE GEORGE ENGINEERING OFFICE WILL BE NOTIFIED 24 HOURS IN ADVANCE OF ANY PLANS TO BEGIN CLEARING AND GRADING OPERATIONS.
4. THE PRINCE GEORGE COUNTY ENGINEERING DEPARTMENT AND ALL OTHER INTERESTED COUNTY AGENCIES SHALL MAKE A CONTINUING REVIEW AND EVALUATION OF THE METHOD USED AND THE OVERALL EFFECTIVENESS OF THE EROSION AND SEDIMENT CONTROL PROGRAM. AN APPROVED EROSION AND SEDIMENT CONTROL PLAN MAY BE AMENDED BY THE PLAN APPROVING AUTHORITY IF ON SITE INSPECTION INDICATES THAT THE APPROVED CONTROL MEASURES ARE NOT EFFECTIVE IN CONTROLLING EROSION AND SEDIMENTATION OR BECAUSE OF CHANGED CIRCUMSTANCES THE APPROVED PLAN CANNOT BE CARRIED OUT.

GENERAL NOTES

1. JANUARY 1, 1993 EDITION OF ROAD AND BRIDGE SPECIFICATIONS AND JANUARY 1, 1993 EDITION OF THE ROAD DESIGNS AND STANDARDS OF THE VIRGINIA DEPARTMENT OF HIGHWAYS SHALL GOVERN THE FOLLOWING:
   A. POURING, CURING, FORMS, WORKMANSHIP, ETC. OF ALL CONCRETE USED ON THIS PROJECT.
   B. STABILIZED BASE COURSE MATERIAL.
   C. MATERIALS AND INSTALLATION OF ALL PIPE CULVERTS.
2. VDOT AND COUNTY APPROVAL OF SUBDIVISION ROAD PLANS DOES NOT PRECLUDE THE RIGHT TO ADDITIONAL FACILITIES SUCH AS SEEDING, PAVING, SILT DAMS, ETC. AS MAY BE DEEMED NECESSARY BY EITHER AUTHORITY PRIOR TO THE THE ACCEPTANCE OF SUCH ROADS IN ORDER TO LIMIT SILTATION AND POLLUTION OF NEARBY LAKES, PONDS, STREAMS AND ADJACENT PROPERTY.
3. THE VDOT APPROVAL OF THESE PLANS WILL EXPIRE THREE (3) YEARS FROM DATE OF APPROVAL.
4. OWNER WILL FURNISH SURVEY CONTROL OFF SET HUBS FOR ALL ROADS AND EASEMENTS FOR ALIGNMENT AND GRADE. ROADS WILL BE STAKED ON ONLY ONE SIDE. REPLACEMENT OF THESE HUBS AND ANY OTHER STAKING WILL BE DONE BY THE CONTRACTOR AT HIS EXPENSE. THE CONTRACTOR SHALL INSPECT THE CONTROL STAKING MENTIONED ABOVE AND VERIFY BEFORE CONSTRUCTION.
5. ALL GRADE STAKES DESTROYED BY THE CONTRACTOR, SHALL BE REPLACED AT HIS EXPENSE.
6. IT SHALL BE THE RESPONSIBILITY OF THE CONTRACTOR TO PRESERVE THE EXISTING RIGHT OF WAY STONES. ANY MARKERS DAMAGED SHALL BE REPLACED AT HIS EXPENSE.
7. CLEARING AND GRUBBING SHALL BE COMPLETE WITHIN THE RIGHT OF WAYS AS INDICATED ON LAYOUT PLAN.
8. ALL DRAINAGE EASEMENTS TO BE CLEARED, GRUBBED, AND GRADED TO CONTAIN WATER FROM PIPE CULVERTS AND TO EXTEND TO A NATURAL WATERCOURSE.
9. EXCESS EXCAVATION TO BE DISPOSED OF AS DIRECTED BY THE ENGINEER.
10. ALL FILLETS AT INTERSECTIONS TO HAVE 35' RADII UNLESS OTHERWISE NOTED.
11. GRADE LINES ON PROFILES DENOTE FINISHED GRADE OF CENTER LINE OF ROAD.
12. BASE MUST BE APPROVED BY VDOT FOR DEPTH, TEMPLATE, AND COMPACTION BEFORE SURFACE TREATMENT IS APPLIED.
13. SLOPE EASEMENTS FOR FILL SLOPES ARE REQUIRED WHERE SLOPES EXCEED PROPOSED RIGHT-OF-WAY LIMITS SHOWN.
14. PERMIT TO TIE INTO EXISTING ROADS, SHALL BE OBTAINED FROM RESIDENT ENGINEER PRIOR TO ROAD CONSTRUCTION.
15. ALL APPROACH GUTTERS TO SAG INLETS SHALL MAINTAIN A MINIMUM SLOPE OF 0.004 ft/ft.
16. PRIME COAT MUST BE APPLIED TO ROAD BASE AGGREGATE PRIOR TO APPLICATION OF ASPHALT SURFACE (PRIME COAT RC-250, 0.3 GALLONS PER SQUARE YARD).
17. ALL UTILITIES TO BE IN PLACE PRIOR TO LAYING BASE MATERIAL.

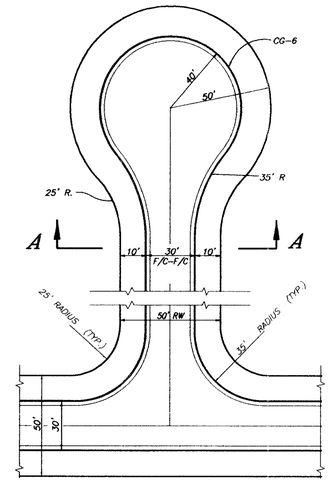

CUL-DE-SAC PLAN

NO SCALE

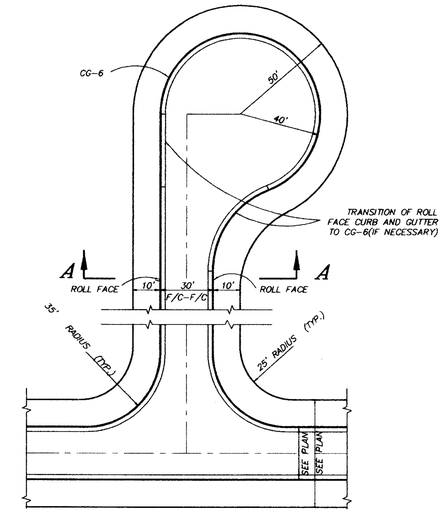

CUL-DE-SAC PLAN

NO SCALE

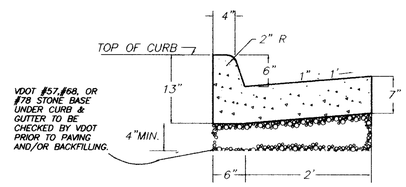

VDOT STANDARD CG-6

NO SCALE

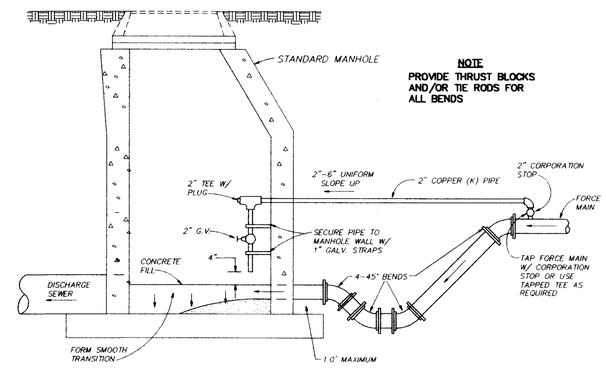

SHALLOW FORCE MAIN

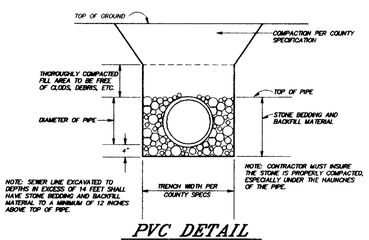

PVC DETAIL

SANITARY SEWER BEDDING AND BACKFILL
DETAIL FOR PLASTIC PIPE

NO SCALE

FORCE MAIN CONNECTIONS INTO MANHOLES

NO SCALE

STANDARDS FOR
WATER AND WASTEWATER SYSTEMS
COUNTY OF PRINCE GEORGE
VIRGINIA

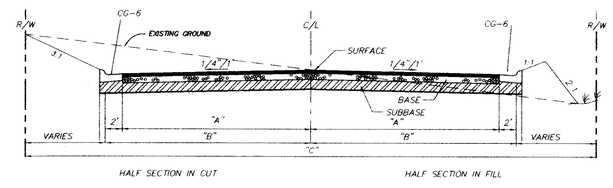

ROAD SECTION "A-A"

ROAD CLASSIFICATIONS

ROAD STA. TO STA.	VPD	CATEGORY	PAVEMENT DESIGN (1) (2) SUBBASE	BASE	SURFACE	"A" PVM'T. WIDTH (C/L - E/P)	"B" C/L - F/C	C/L - B/C	"C" R/W WIDTH
TAKACH ROAD STA. 68+00.00 TO STA. 79+21.33	390	I		6" 21-B	2" SM-2A	13'	15'	15'-6"	50'
TAKACH ROAD STA. 64+10.62 TO STA. 68+00.00	460	II		8" 21-B	2" SM-2A	13'	15'	15'-6"	50'
RACHAEL CIRCLE STA. 3+00.00 TO STA. 6+89.58	60	I		6" 21-B	2" SM-2A	13'	15'	15'-6"	50'

(1) MINIMUM PAVEMENT DESIGN IS BASED ON A MINIMUM CBR VALUE OF 10. PAVEMENT DESIGN MAY BE REVISED DUE TO SOIL CONDITIONS AT TIME OF CONSTRUCTION.
(2) A TACK COAT SHALL BE APPLIED BETWEEN THE AGGREGATE BASE AND ASPHALT COURSES IN ACCORDANCE WITH V.D.O.T. STANDARDS.

CERTIFICATION

I, WE HEREBY CERTIFY THAT THE LOT LINES, LOT NUMBERS, BLOCK NUMBERS AND THE STREET NAMES SHOWN ON THESE PLANS ARE IDENTICAL TO THOSE SHOWN ON THE OFFICIAL RECORDED PLAT, AND NO CHANGES WILL BE MADE WITHOUT PRIOR APPROVAL FROM THE UTILITY DEPARTMENT. IF ANY CHANGES ARE APPROVED, REVISED WATER AND/OR SEWER PLANS WILL BE SUBMITTED WITHIN 48 HOURS AFTER APPROVAL.

ENGINEER

THIS DRAWING PREPARED AT THE PRINCE GEORGE COUNTY OFFICE

COMMONWEALTH OF VIRGINIA
DERRICK A. JOHNSON
No. 24761
5-2-99
PROFESSIONAL ENGINEER

PRINCE GEORGE COUNTY OFFICE
4411 CROSSINGS BOULEVARD
PRINCE GEORGE, VA 23875-1455
Telephone: 804-457-0815
Fax: 804-457-0816
e-mail: timmons@timmons.com

CORPORATE OFFICE
711 N. COURTHOUSE ROAD
RICHMOND, VA 23236-4099
Telephone: 804-379-3900
Fax: 804-378-1900
Web Site: www.timmons.com

OTHER BRANCH OFFICES
Herndon, VA • 703-787-7386
Hanover County, VA • 804-559-4520
Fredericksburg, VA • 540-891-4010
Kernersville, N.C. • 336-996-3598

DATE	REVISION DESCRIPTION
5-10-99	COUNTY COMMENTS
8-20-99	COUNTY COMMENTS

DATE	4-4-96
DRAWN BY	S.T.P.
DESIGNED BY	S.T.P
CHECKED BY	D.A.J
SCALE	NONE
JOB NO.	16588-05
SHEET NO.	2 OF 8

ENGINEERS * SURVEYORS * PLANNERS * LANDSCAPE ARCHITECTS * ENVIRONMENTAL SCIENTISTS * GEOGRAPHIC INFORMATION SYSTEMS CONSULTANTS * CONSTRUCTION MANAGERS

TIMMONS Founded 1953

BRANCHESTER LAKES - SECTION 14

BLAND DISTRICT * PRINCE GEORGE COUNTY, VIRGINIA

NOTES & TYPICAL SECTIONS

These plans and associated documents are the exclusive property of TIMMONS and may not be reproduced in whole or in part and shall not be used for any purpose whatsoever inclusive, but not limited to construction, bidding, and/or construction staking without the express written consent of TIMMONS.