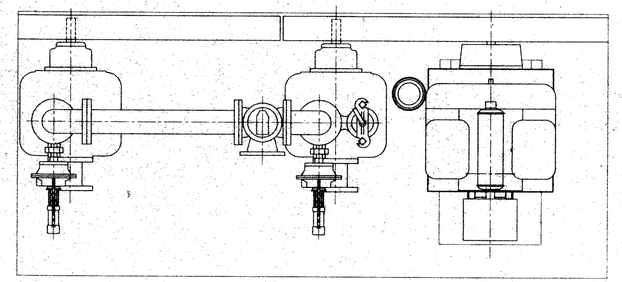

ITEM	DESCRIPTION	MAT'L & SIZE
1	PUMP	CAST IRON T3A3-B 3x3x4
2	MOTOR FREQUENCY	15 HP 1850 RPM
3	ENGINE (WISCONSIN)	MODEL:VG4DG FUEL:PROPANE
4	PUMP & MOTOR BASE	STEEL
5	BELT GUARD ASSY	STEEL
6	DISCHARGE CHECK VALVE	CAST IRON
7	DISCHARGE PLUG VALVE	CAST IRON 3-WAY
8	ELBOW 90	CAST IRON
9	AIR RELEASE VALVE	CAST IRON 1"(SHIPPED LOOSE)

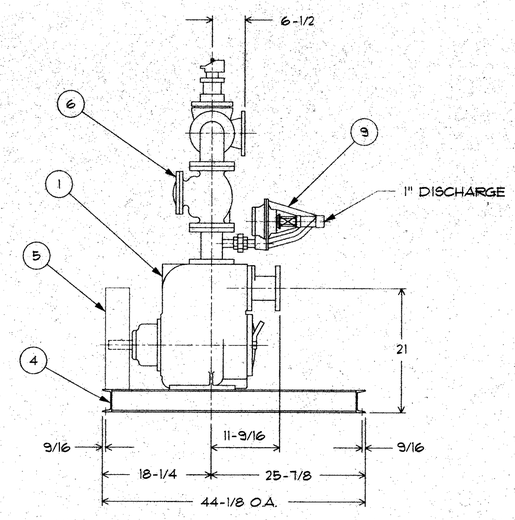

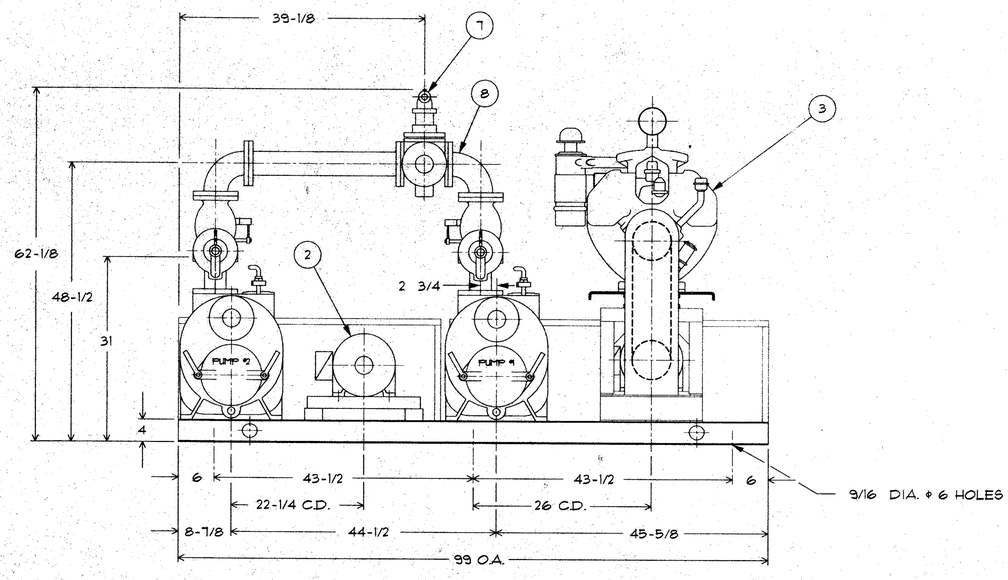

CENTER DISCHARGE

FINAL

JKTIMMONS & ASSOCIATES, P.C.
ENGINEERS ARCHITECTS SURVEYORS PLANNERS
711 NORTH COURTHOUSE ROAD
RICHMOND, VIRGINIA 23236
TELEPHONE: (804) 794-3500
8803 STAPLES MILL ROAD
RICHMOND, VIRGINIA 23228
TELEPHONE: (804) 262-7396
4411 CROSSING BOULEVARD
PRINCE GEORGE, VIRGINIA 23875
TELEPHONE: (804) 458-8685
8717 MECHANICSVILLE TURNPIKE
MECHANICSVILLE, VA. 23111-4621
TELEPHONE: (804) 559-4520

COMMONWEALTH OF VIRGINIA
STIG OWENS
No. 21331
5/10/95
PROFESSIONAL ENGINEER

DATE	
5-8-95	REVISED PUMP HOUSE

LANDSCAPE ARCHITECTS

DATE 3-30-95
DRAWN BY G.L.
DESIGNED BY S.O.
CHECKED BY
SCALE 1/2"=1'

BRANCHESTER LAKES SUBDIVISION
SANITARY SEWER LIFT STATION

SHEET NO. 3 of 4
JOB NO. 16119-7