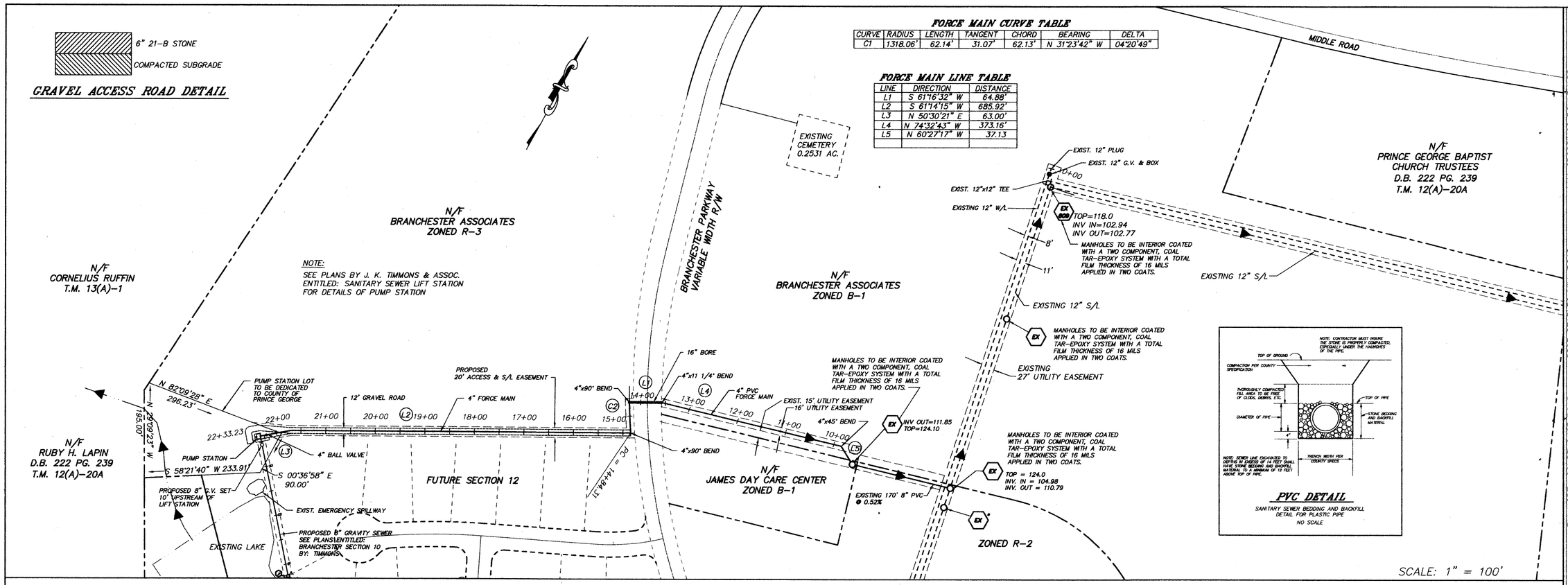


**FORCE MAIN CURVE TABLE**

| CURVE | RADIUS | LENGTH | TANGENT | CHORD | BEARING | DELTA |
|---|---|---|---|---|---|---|
| C1 | 1318.06' | 62.14' | 31.07' | 62.13' | N 31°23'42" W | 04°20'49" |

**FORCE MAIN LINE TABLE**

| LINE | DIRECTION | DISTANCE |
|---|---|---|
| L1 | S 61°16'32" W | 64.88' |
| L2 | S 61°14'15" W | 685.92' |
| L3 | N 50°30'21" E | 63.00' |
| L4 | N 74°32'43" W | 373.16' |
| L5 | N 60°27'17" W | 37.13 |
| | | |

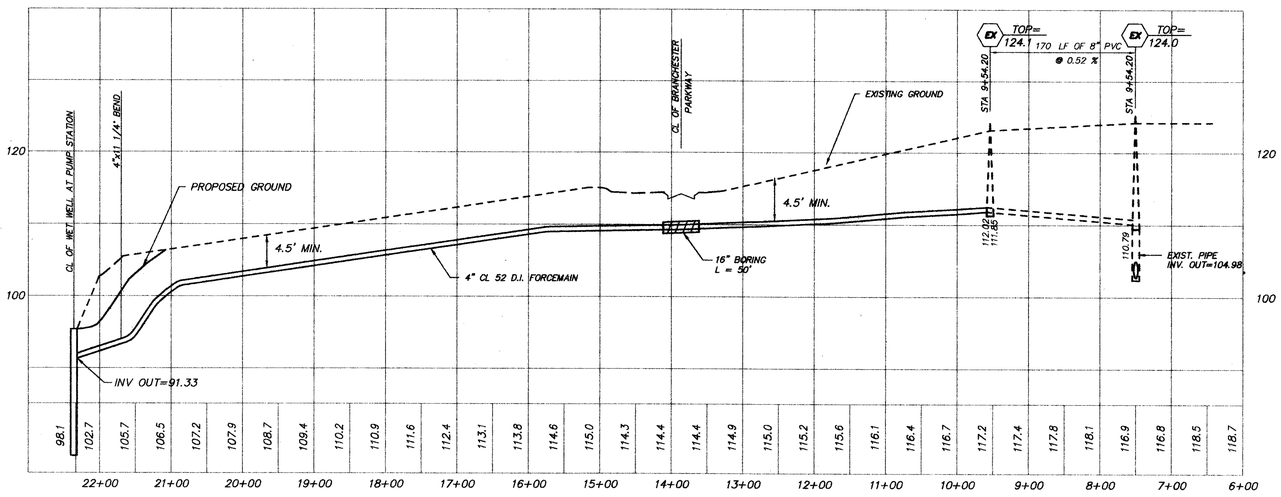


## CENTERLINE PROFILE

SCALE: 1"=100' HORIZ.
1"=10' VERT.

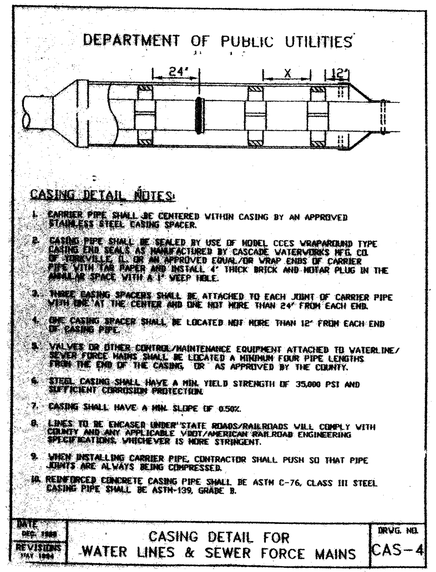


CASING DETAIL NOTES:

1. CARRIER PIPE SHALL BE CENTERED WITHIN CASING BY AN APPROVED STAINLESS STEEL CASING SPACER.
2. CASING PIPE SHALL BE SEALED BY USE OF MODEL CCES WRAPAROUND TYPE CASING END SEALS AS MANUFACTURED BY CASCADE WATERWORKS MFG. CO. OF JONESVILLE, IL. OR AN APPROVED EQUAL/OR WRAP ENDS OF CARRIER PIPE WITH TAR PAPER AND INSTALL 4" THICK BRICK AND MORTAR PLUG IN THE ANNULAR SPACE WITH A 1" WEEP HOLE.
3. THREE CASING SPACERS SHALL BE ATTACHED TO EACH JOINT OF CARRIER PIPE WITH ONE AT THE CENTER AND ONE NOT MORE THAN 24" FROM EACH END.
4. END CASING SPACER SHALL BE LOCATED NOT MORE THAN 12" FROM EACH END OF CASING PIPE.
5. VALVES OR OTHER CONTROL/MAINTENANCE EQUIPMENT ATTACHED TO WATER LINE/SEWER FORCE MAINS SHALL BE LOCATED A MINIMUM FOUR PIPE LENGTHS FROM THE END OF THE CASING, OR AS APPROVED BY THE COUNTY.
6. STEEL CASING SHALL HAVE A MIN. YIELD STRENGTH OF 35,000 PSI AND SUFFICIENT CORROSION PROTECTION.
7. CASING SHALL HAVE A MIN. SLOPE OF 0.50%.
8. LINES TO BE ENCASED UNDER STATE ROADS/RAILROADS WILL COMPLY WITH COUNTY AND ANY APPLICABLE VDOT/AMERICAN RAILROAD ENGINEERING SPECIFICATIONS, WHICHEVER IS MORE STRINGENT.
9. WHEN INSTALLING CARRIER PIPE, CONTRACTOR SHALL PUSH SO THAT PIPE JOINTS ARE ALWAYS BEING COMPRESSED.
10. REINFORCED CONCRETE CASING PIPE SHALL BE ASTM C-76, CLASS III STEEL CASING PIPE SHALL BE ASTM-139, GRADE B.

| DATE DEC. 1988 REVISIONS MAY 1994 | CASING DETAIL FOR WATER LINES & SEWER FORCE MAINS | DRWG. NO. CAS-4 |
|---|---|---|

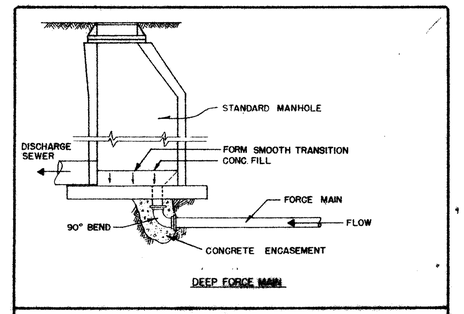


DEEP FORCE MAIN

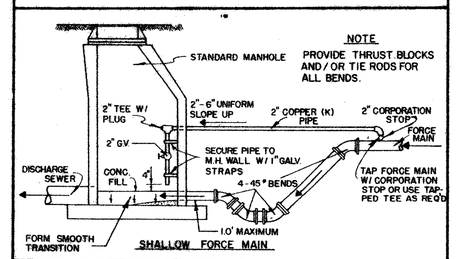


SHALLOW FORCE MAIN

**FORCE MAIN CONNECTIONS INTO MANHOLES**

STANDARDS FOR

**WATER AND WASTEWATER SYSTEMS**

COUNTY OF PRINCE GEORGE
VIRGINIA

DATE 7-78 PLATE NO. 28

FINAL


711 NORTH COURTHOUSE ROAD
RICHMOND, VIRGINIA 23236
TELEPHONE: (804) 794-3500

8803 STAPLES MILL ROAD
RICHMOND, VIRGINIA 23228
TELEPHONE: (804) 262-7396

4411 CROSSINGS BOULEVARD
PRINCE GEORGE, VIRGINIA 23875
TELEPHONE: (804) 458-8685

COMMONWEALTH OF VIRGINIA
DERRICK A. JOHNSON
No. 24781
6-20-95
PROFESSIONAL ENGINEER

LANDSCAPE ARCHITECTS
PLANNERS
ENGINEERS
SURVEYORS
ARCHITECTS


| DATE | REVISION DESCRIPTION |
|---|---|
| 5-15-95 | HEALTH DEPARTMENT AND COUNTY |
| 6-26-95 | COUNTY REVISIONS |

| | |
|---|---|
| DATE | 2-28-95 |
| DRAWN BY | J.E.A. |
| DESIGNED BY | D.A.J. |
| CHECKED BY | E.L.G. |
| SCALE | AS SHOWN |

# BRANCHESTER LAKES
PRINCE GEORGE COUNTY, VIRGINIA

## FORCE MAIN PLAN & PROFILE

SHEET NO. 2 OF 4

JOB NO. 16119-05