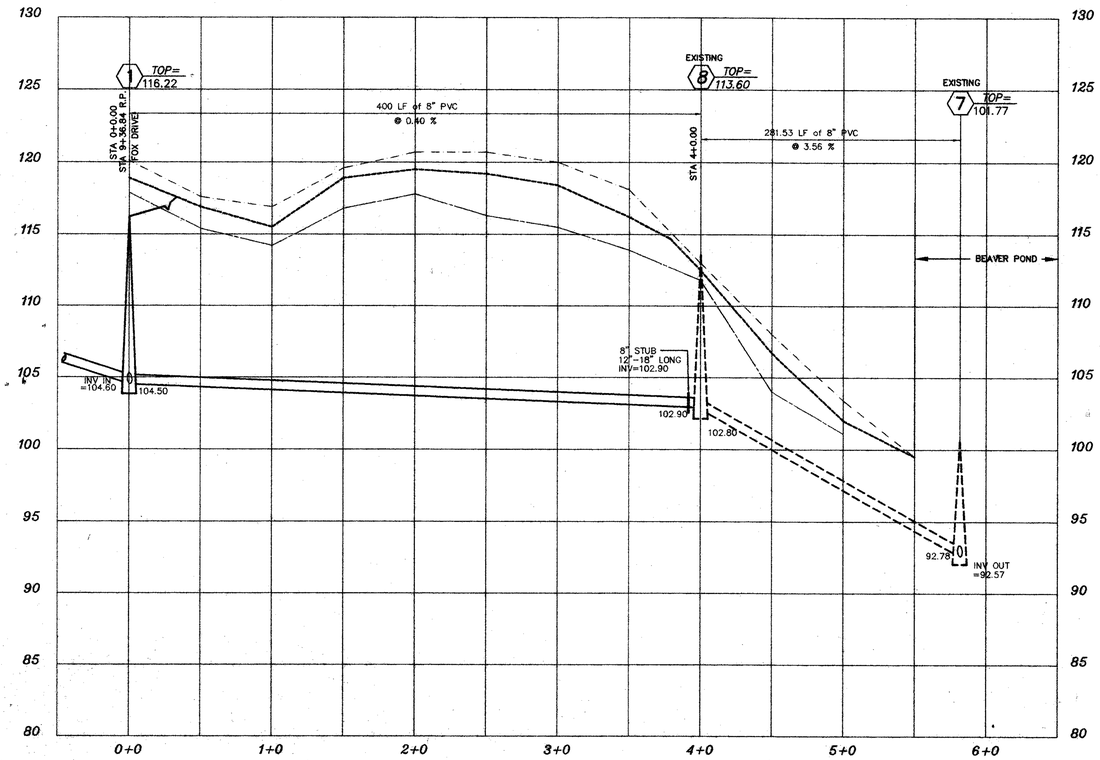

SANITARY SEWER MAIN PROFILE

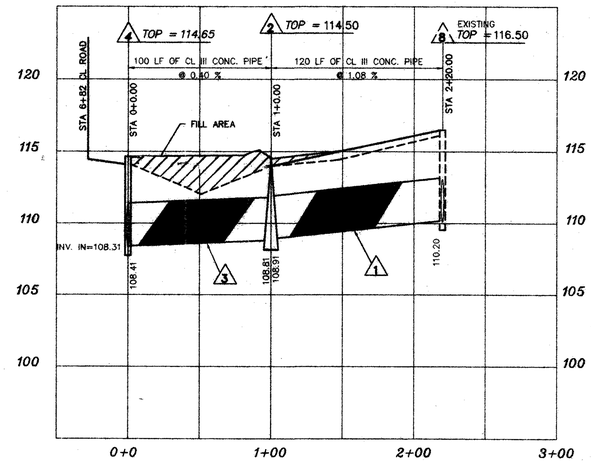

STORM SEWER OUTFALL

KEY	
25' RIGHT	
EXIST. GRD.	
PROP. GRADE	
25' LEFT	

SCALE:
HORIZONTAL: 1"=50'
VERTICAL: 1"=5'

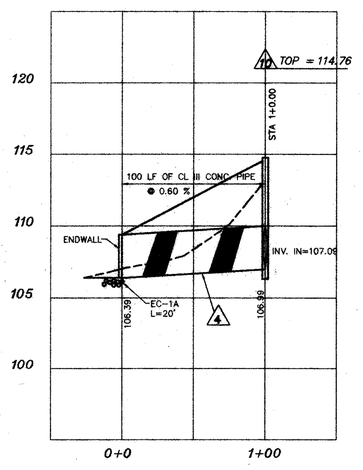

STORM SEWER OUTFALL

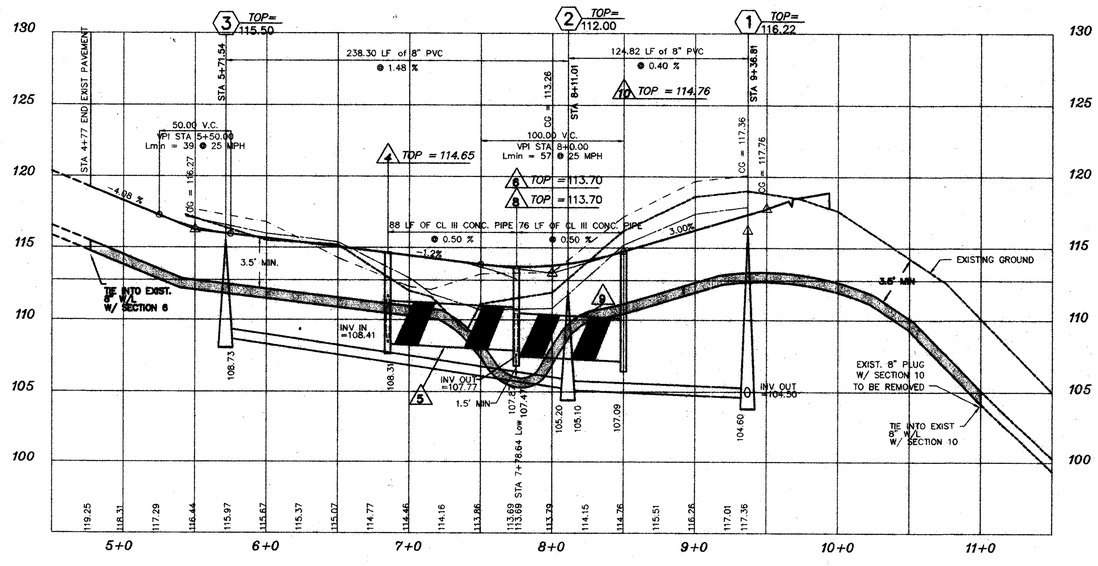

FOX DRIVE

FINAL

711 NORTH COURTHOUSE ROAD
RICHMOND, VIRGINIA 23236
TELEPHONE: (804) 794-3500

8803 STAPLES MILL ROAD
RICHMOND, VIRGINIA 23228
TELEPHONE: (804) 262-7396

4411 CROSSINGS BOULEVARD
PRINCE GEORGE, VIRGINIA 23875
TELEPHONE: (804) 458-8685

ENGINEERS * ARCHITECTS * SURVEYORS * PLANNERS * LANDSCAPE ARCHITECTS

COMMONWEALTH OF VIRGINIA
DERRICK A. JOHNSON
No. 24761
7-10-95
PROFESSIONAL ENGINEER

DATE	REVISION DESCRIPTION
7-10-95	COUNTY REVISIONS

DATE 5-23-95
DRAWN BY J.E.A.
DESIGNED BY D.A.J.
CHECKED BY E.L.G.
SCALE AS SHOWN

BRANCHESTER LAKE SECTION 11
BERMUDA DISTRICT * CHESTERFIELD COUNTY, VIRGINIA

PROFILES

SHEET NO. 4 OF 5
JOB NO. 16119