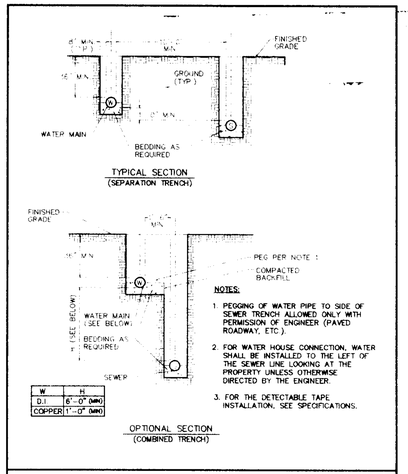

NOTES:
1. PEGGING OF WATER PIPE TO SIDE OF SEWER TRENCH ALLOWED ONLY WITH PERMISSION OF ENGINEER (PAVED ROADWAY, ETC.)
2. FOR WATER HOUSE CONNECTION, WATER SHALL BE INSTALLED TO THE LEFT OF THE SEWER LINE LOOKING AT THE PROPERTY UNLESS OTHERWISE DIRECTED BY THE ENGINEER.
3. FOR THE DETECTABLE TAPE INSTALLATION, SEE SPECIFICATIONS.

W	H
D.I.	6'-0" (MIN)
COPPER	1'-0" (MIN)

MIN. WATER & SEWER LINE SEPARATION

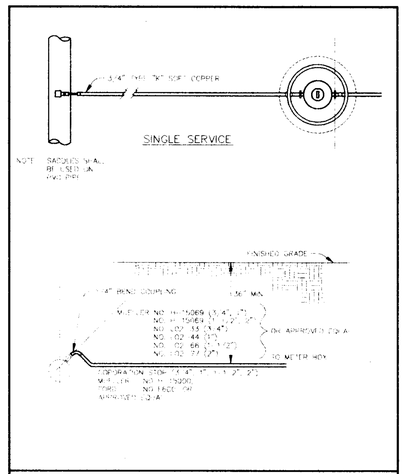

WATER SERVICE INSTALLATION

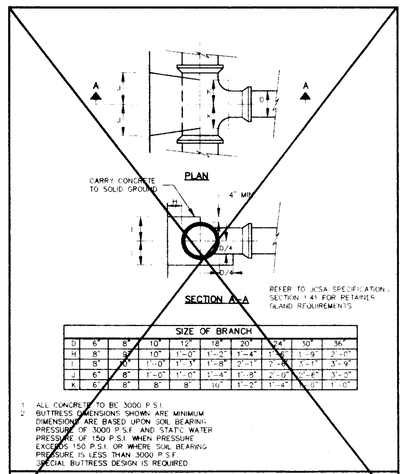

SIZE OF BRANCH									
D	6"	8"	10"	12"	18"	20"	24"	30"	36"
H	8"	8"	10"	1'-0"	1'-2"	1'-4"	1'-6"	1'-9"	2'-0"
I	8"	10"	1'-0"	1'-3"	1'-8"	2'-1"	2'-6"	3'-1"	3'-9"
J	6"	8"	1'-0"	1'-0"	1'-4"	1'-8"	2'-0"	2'-4"	3'-0"
K	6"	8"	8"	8"	10"	1'-2"	1'-4"	1'-6"	1'-0"

1. ALL CONCRETE TO BE 3000 P.S.I.
2. BUTTRESS DIMENSIONS SHOWN ARE MINIMUM DIMENSIONS ARE BASED UPON SOIL BEARING PRESSURE OF 3000 P.S.F. AND STATIC WATER PRESSURE OF 150 P.S.I. WHEN PRESSURE EXCEEDS 150 P.S.I. OR WHERE SOIL BEARING PRESSURE IS LESS THAN 3000 P.S.F. SPECIAL BUTTRESS DESIGN IS REQUIRED.

BUTTRESS FOR TEES

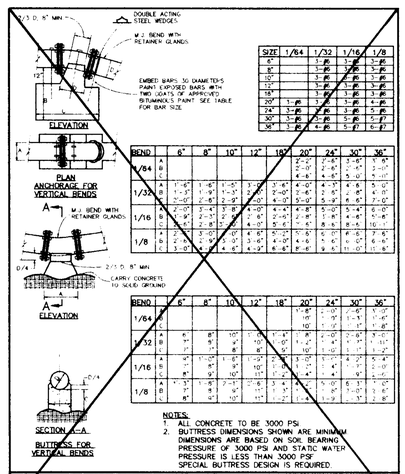

SIZE	1/64	1/32	1/16	1/8
6"		1-#5	1-#5	1-#5
8"		1-#5	1-#5	1-#5
10"		1-#5	1-#5	1-#5
12"		1-#5	1-#5	1-#5
18"		1-#5	1-#5	1-#5
20"	1-#5	1-#5	1-#5	1-#6
24"	1-#5	1-#5	1-#5	1-#6
30"	1-#5	1-#5	1-#5	1-#7
36"	1-#5	1-#6	1-#7	1-#7

EMBED BARS 30 DIAMETERS PAINT EXPOSED BARS WITH TWO COATS OF APPROVED BITUMINOUS PAINT SEE TABLE FOR BAR SIZE

BEND		6"	8"	10"	12"	18"	20"	24"	30"	36"
1/64	A						2'-0"	2'-6"	3'-0"	3'-6"
	B						2'-0"	2'-6"	3'-0"	3'-0"
	C						4'-6"	4'-6"	5'-0"	5'-0"
1/32	A	1'-6"	1'-6"	1'-6"	3'-0"	3'-6"	4'-0"	4'-3"	4'-6"	5'-0"
	B	1'-3"	1'-9"	1'-9"	2'-3"	2'-0"	2'-6"	2'-9"	3'-0"	4'-0"
	C	3'-0"	2'-6"	2'-9"	4'-0"	4'-0"	5'-0"	5'-9"	6'-6"	7'-0"
1/16	A	2'-0"	2'-3"	2'-6"	3'-0"	4'-3"	4'-6"	5'-0"	5'-4"	6'-0"
	B	1'-9"	2'-3"	2'-6"	2'-9"	2'-9"	3'-6"	3'-9"	4'-6"	4'-9"
	C	3'-6"	2'-9"	3'-3"	4'-6"	5'-6"	6'-0"	6'-6"	8'-0"	10'
1/8	A	2'-6"	2'-9"	3'-0"	4'-6"	5'-0"	5'-6"	6'-0"	6'-6"	7'-6"
	B	2'-0"	2'-6"	3'-0"	3'-6"	4'-0"	4'-6"	5'-6"	6'-0"	6'-6"
	C	3'-0"	3'-3"	4'-6"	4'-9"	6'-6"	8'-6"	9'-6"	11'-0"	11'-6"

BEND		6"	8"	10"	12"	18"	20"	24"	30"	36"
1/64	A						1'-8"	1'-9"	2'-0"	2'-0"
	B						10"	1'-0"	1'-0"	1'-0"
	C						10"	1'-0"	1'-3"	1'-6"
1/32	A	8"	8"	10"	1'-0"	1'-3"	1'-6"	1'-9"	2'-0"	2'-3"
	B	7"	8"	9"	10"	1'-0"	1'-3"	1'-6"	1'-9"	2'-0"
	C	1'-7"	1'-8"	1'-9"	2'-0"	2'-6"	3'-0"	3'-6"	4'-0"	4'-6"
1/16	A	8"	1'-0"	1'-0"	1'-0"	1'-3"	1'-3"	1'-6"	1'-9"	2'-0"
	B	7"	8"	9"	10"	1'-0"	1'-3"	1'-6"	1'-9"	2'-0"
	C	1'-7"	1'-8"	1'-9"	2'-0"	2'-6"	3'-0"	3'-6"	4'-0"	4'-6"
1/8	A	1'-3"	1'-6"	1'-9"	1'-9"	2'-3"	2'-6"	3'-0"	3'-3"	3'-6"
	B	1'-3"	1'-6"	1'-9"	1'-9"	2'-0"	2'-3"	2'-6"	2'-9"	3'-0"
	C	1'-6"	1'-9"	2'-0"	2'-3"	2'-9"	3'-0"	3'-3"	3'-6"	3'-9"

NOTES:
1. ALL CONCRETE TO BE 3000 PSI
2. BUTTRESS DIMENSIONS SHOWN ARE MINIMUM DIMENSIONS ARE BASED ON SOIL BEARING PRESSURE OF 3000 PSI AND STATIC WATER PRESSURE IS LESS THAN 3000 PSF. SPECIAL BUTTRESS DESIGN IS REQUIRED.

BUTTRESSES & ANCHORAGES FOR VERTICAL BENDS

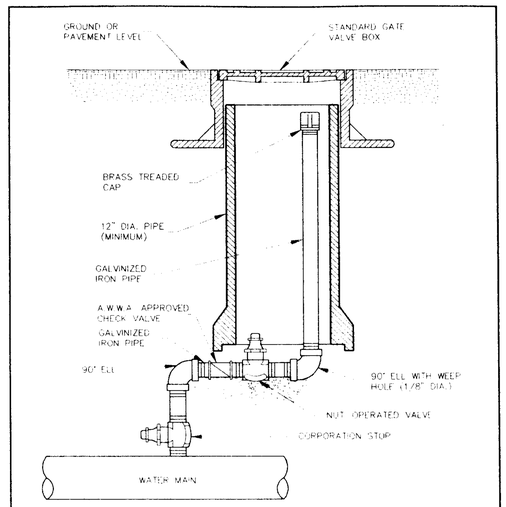

GENERAL NOTE:
1. 2" MATERIAL TO BE USED IN ALL PIPE.
2. TAPPING SADDLES SHALL BE USED ON PVC PIPE. DUCTILE IRON PIPE MAY BE DIRECT TAPPED.

MANUAL AIR RELEASE VALVE

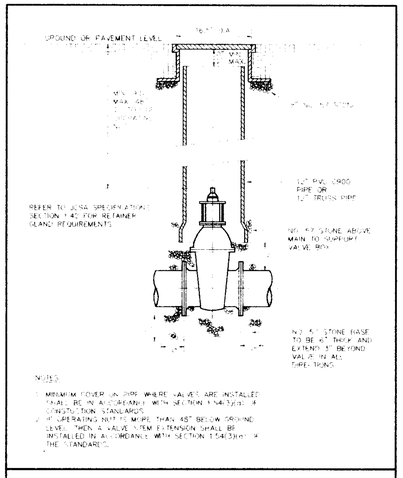

NOTES:
1. MINIMUM COVER ON PIPE WHERE VALVES ARE INSTALLED MAY BE IN ACCORDANCE WITH SECTION 1.54(3)(c) OF CONSTRUCTION STANDARDS.
2. IF OPERATING NUT IS MORE THAN 48" BELOW GROUND LEVEL, THEN A VALVE STEM EXTENSION SHALL BE INSTALLED IN ACCORDANCE WITH SECTION 1.54(3)(h) OF THE STANDARDS.

TYPICAL VALVE SETTING

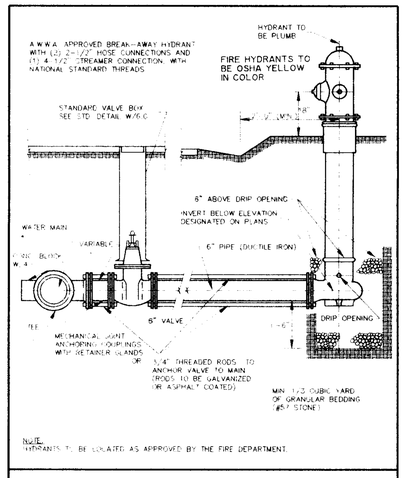

FIRE HYDRANT SETTING

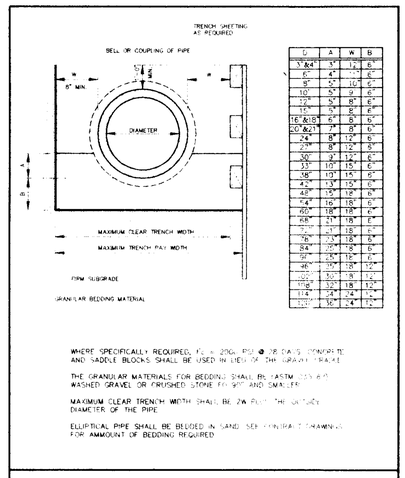

D	A	W	B
3/4"	1"	12"	6"
6"	4"		6"
8"	5"	10"	6"
10"	5"	9"	6"
12"	5"	8"	6"
15"	5"	8"	6"
16" & 18"	6"	8"	6"
20" & 24"	7"	9"	6"
27"	8"	12"	6"
30"	8"	12"	6"
36"	10"	15"	6"
42"	13"	15"	6"
48"	15"	18"	6"
54"	16"	18"	6"
60"	18"	18"	6"
66"	21"	18"	6"
72"	21"	18"	6"
78"	24"	18"	6"
84"	27"	18"	6"
90"	30"	18"	6"
96"	30"	18"	6"
102"	30"	18"	12"
108"	32"	18"	12"
114"	34"	24"	12"
120"	36"	24"	12"

WHERE SPECIFICALLY REQUIRED, PLACE 2000 PSI @ 28 DAYS CONCRETE AND SADDLE BLOCKS SHALL BE USED IN LIEU OF THE GRAVEL CRADLE.

THE GRANULAR MATERIALS FOR BEDDING SHALL BE ASTM C33 #57 WASHED GRAVEL OR CRUSHED STONE FOR 3/4" AND SMALLER.

MAXIMUM CLEAR TRENCH WIDTH SHALL BE 2W PLUS THE OUTSIDE DIAMETER OF THE PIPE.

ELLIPTICAL PIPE SHALL BE BEDDED IN SAND. SEE CONTRACT DRAWINGS FOR AMMOUNT OF BEDDING REQUIRED.

BEDDING AND TRENCH WIDTHS

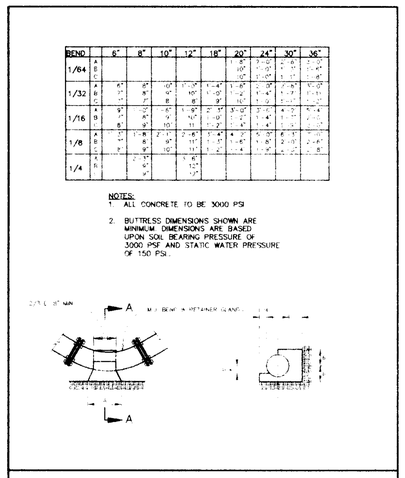

BEND		6"	8"	10"	12"	18"	20"	24"	30"	36"
1/64	A						1'-8"	1'-10"	2'-0"	2'-0"
	B						10"	1'-0"	1'-0"	1'-0"
	C						10"	1'-0"	1'-3"	1'-6"
1/32	A	8"	8"	10"	1'-0"	1'-3"	1'-6"	1'-9"	2'-0"	2'-3"
	B	7"	8"	9"	10"	1'-0"	1'-3"	1'-6"	1'-9"	2'-0"
	C	1'-7"	1'-8"	1'-9"	2'-0"	2'-6"	3'-0"	3'-6"	4'-0"	4'-6"
1/16	A	8"	1'-0"	1'-0"	1'-0"	1'-3"	1'-3"	1'-6"	1'-9"	2'-0"
	B	7"	8"	9"	10"	1'-0"	1'-3"	1'-6"	1'-9"	2'-0"
	C	1'-7"	1'-8"	1'-9"	2'-0"	2'-6"	3'-0"	3'-6"	4'-0"	4'-6"
1/8	A	1'-3"	1'-6"	1'-9"	1'-9"	2'-3"	2'-6"	3'-0"	3'-3"	3'-6"
	B	1'-3"	1'-6"	1'-9"	1'-9"	2'-0"	2'-3"	2'-6"	2'-9"	3'-0"
	C	1'-6"	1'-9"	2'-0"	2'-3"	2'-9"	3'-0"	3'-3"	3'-6"	3'-9"

NOTES:
1. ALL CONCRETE TO BE 3000 PSI
2. BUTTRESS DIMENSIONS SHOWN ARE MINIMUM DIMENSIONS ARE BASED UPON SOIL BEARING PRESSURE OF 3000 PSF AND STATIC WATER PRESSURE OF 150 PSI.

BUTTRESS FOR HORIZONTAL BENDS

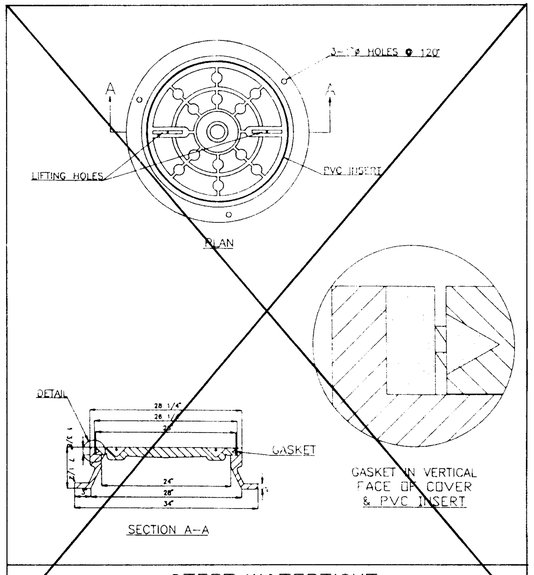

STEET WATERTIGHT MANHOLE FRAME AND COVER

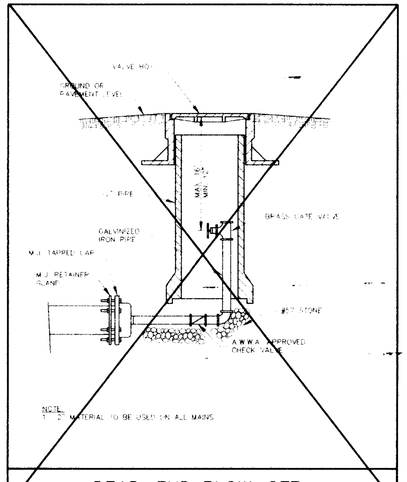

NOTE:
1. 2" MATERIAL TO BE USED ON ALL MAINS.

DEAD-END BLOW-OFF

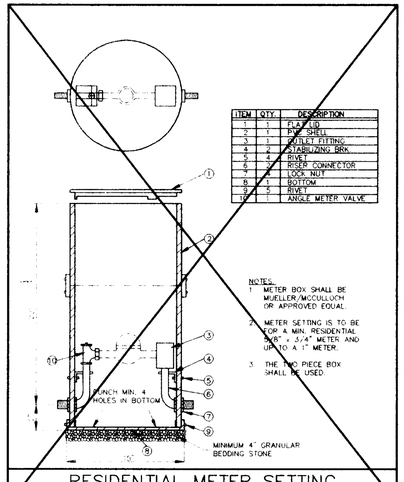

ITEM	QTY.	DESCRIPTION
1	1	FLAT LID
2	1	PIPE SHELL
3	1	OUTLET FITTING
4	2	STABILIZING BRK.
5	4	RIVET
6	2	RISER CONNECTOR
7	3	LOCK NUT
8	1	BOTTOM
9	5	RIVET
10	1	ANGLE METER VALVE

NOTES:
1. METER BOX SHALL BE MUELLER/McCULLOCH OR APPROVED EQUAL.
2. METER SETTING IS TO BE FOR 4 MIN. RESIDENTIAL 5/8" x 3/4" METER AND UP TO A 1" METER.
3. THE TWO PIECE BOX SHALL BE USED.

RESIDENTIAL METER SETTING
(5/8", (5/8" TO 1")

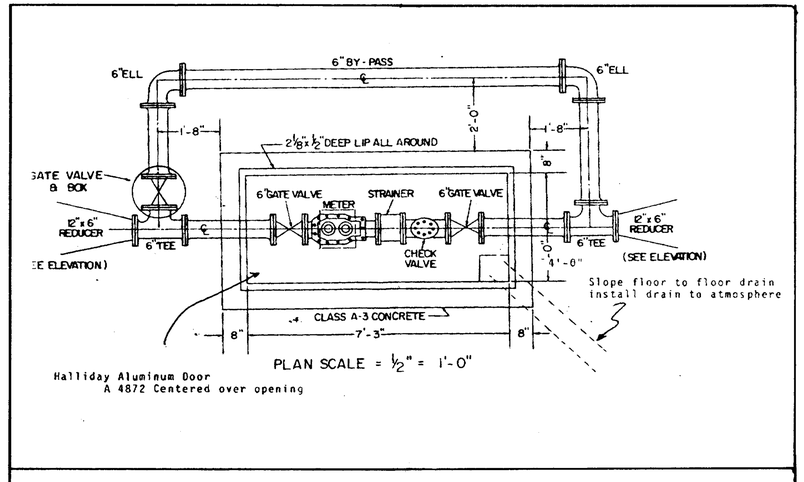

4" METER SETTING

FINAL

BEFORE DIGGING CALL "MISS UTILITY" OF VIRGINIA AT 1 - 800 - 552 - 7001

Rickmond Engineering, Inc.
Environmental Engineers
Land Surveyors
Land Planners
Designed By: KMJ | Drawn By: KMJ | Date: 1/4/95 | Scale: AS SHOWN | Job No.: 94206 | File Number: 94206

COMMONWEALTH OF VIRGINIA
K.M. JENKINS II
No. 022872
1/31/95
PROFESSIONAL ENGINEER

2 KMJ REVISED PER COMMENTS 5/9/95
1 CAN REV PER COUNTY COMMENTS 1-26-95

BRANCHESTER LAKES APARTMENTS
DETAIL SHEET
PRINCE GEORGE COUNTY, VIRGINIA

Job Number: 94206
Sheet No.: C9