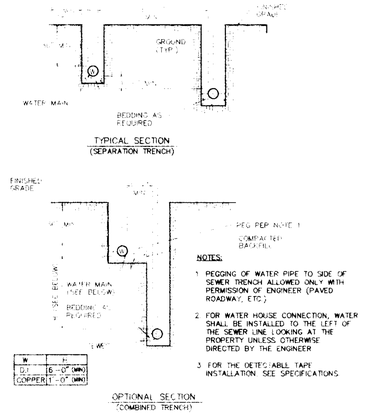

MIN. WATER & SEWER LINE SEPARATION

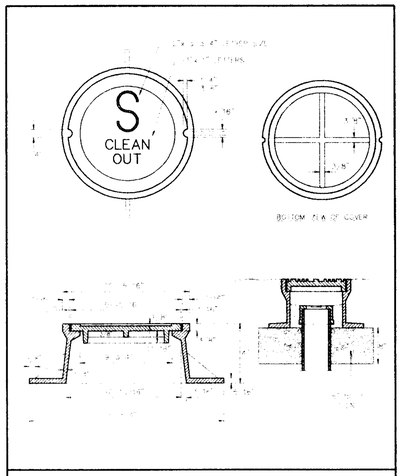

CLEANOUT COVER ASSEMBLY

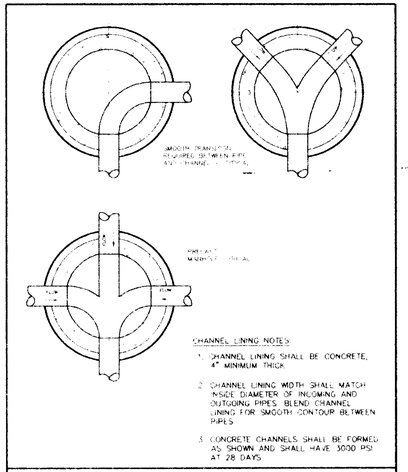

PLANS FOR MANHOLES

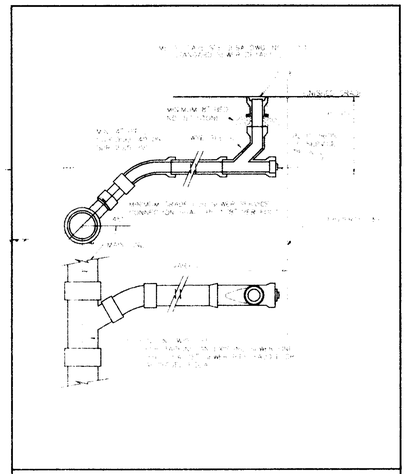

TYPICAL SEWER LATERAL CONNECTION

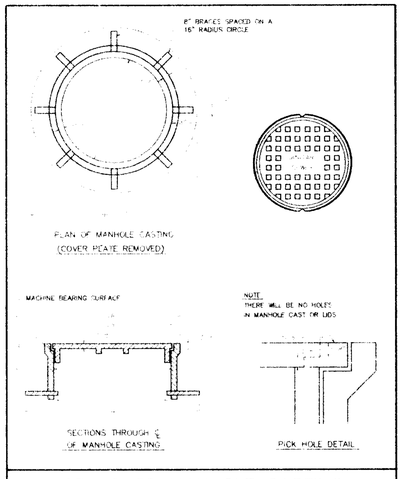

STANDARD MANHOLE CASTING

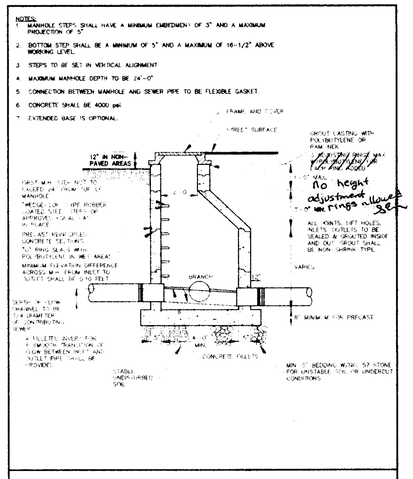

STANDARD MANHOLE

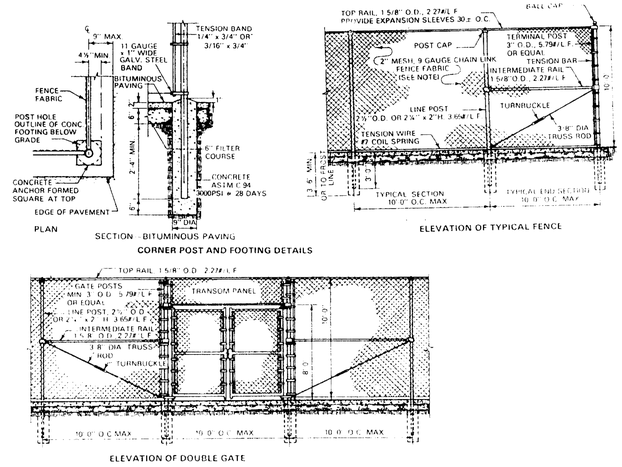

NOTES.

All measurements for court markings are to the outside of lines except for those involving the center service line which is equally divided between the right and left service courts.

All court markings to be 2" wide.

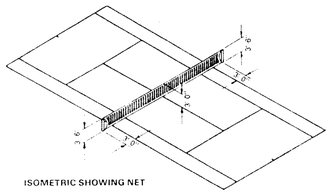

ISOMETRIC SHOWING NET

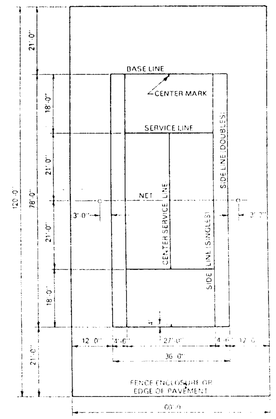

COURT LAYOUT

FENCE ENCLOSURES

Fence posts shall be a minimum of schedule 40 weight regardless of cross sectional configuration.

Fabric shall be chain link with galvanized coating per ASTM A392 or aluminized per ASTM A491, (optional polyvinyl chloride coated steel)

Reinforcing tension wire is to have a minimum tensil strength of 80,000 P.S.I.

Hog rings of .110" diameter aluminum wire shall be used to attach fabric to reinforcing tension wire 2'-0" O.C.

Tie wire of .144" diameter aluminum alloy shall be used to attach fabric to top rail and intermediate posts 14" O.C.

Tension bars of 1/4" x 3/4" or 3/16" x 3/4" galvanized steel woven through the fabric are to be fastened to terminal and gate posts with 11 gauge x 1" wide galvanized steel bands 14" O.C.

Selvage top and bottom is to be knuckled.

All ferrous metal parts are to be hot dipped galvanized or aluminized after fabrication.

Gates are to have offset hinges and a latching device that allows access to a padlocking device from both sides.

Concrete footings shall be minimum 9" diameter. Concrete shall conform to ASTM C94, maximum 3/4" aggregate, minimum 3,000 P.S.I. compressive strength (f'c) at 28 days.

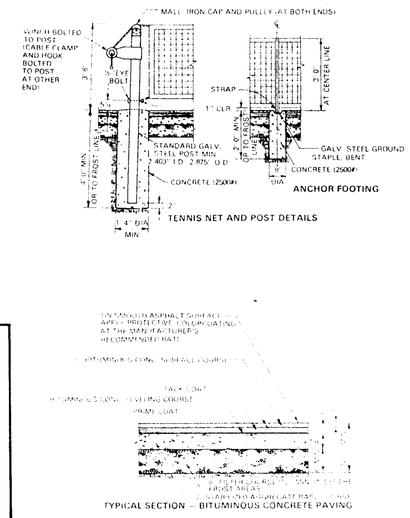

TENNIS COURT DETAILS

FIXED NET POSTS

POST PIPE SIZES

Badminton, Paddle Tennis, Platform Tennis and Tennis - minimum 2.469" I.D., 2.875" O.D.

Volleyball - minimum 3.068" I.D., 3.500" O.D.

FOOTINGS

Concrete - 1'-4" minimum diameter for end posts, 8" minimum diameter for tennis anchor footing, and 4'-0" or to frost line depth. Top of concrete to slope away from post. Concrete minimum 2500#.

PIPE AND FITTINGS

All ferrous metal parts are to be hot dip galvanized or aluminized after fabrication.

PAINTING

If posts are to be painted, they should be etched with acid, primed and painted with a good exterior enamel.

BITUMINOUS MATERIAL

Base - 4" minimum stabilized aggregate base course over minimum 6" filter course.

Surface - minimum 2-½" in two lifts, 1-½" leveling course of bituminous concrete and 1" surface course of bituminous concrete.

Seacoat - on smooth asphalt surface apply protective color coating at the manufacturer's recommended rate.

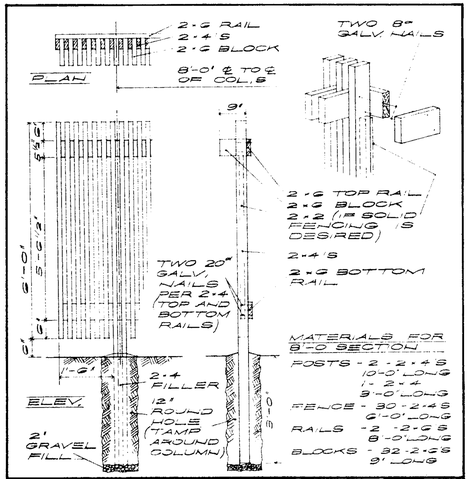

POOL FENCE DETAILS

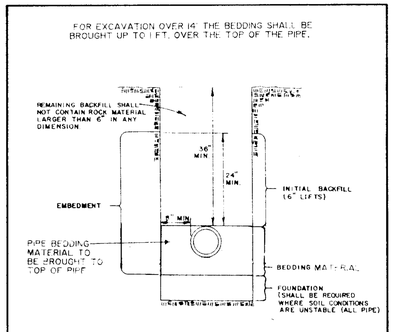

SANITARY SEWER TRENCHING DETAIL

FINAL

BEFORE DIGGING CALL "MISS UTILITY" OF VIRGINIA AT 1 - 800 - 552 - 7001

Rickmond Engineering, Inc.

File Name 94208
94205
AMJ
AS SHOWN
AMJ
AMJ
AMJ