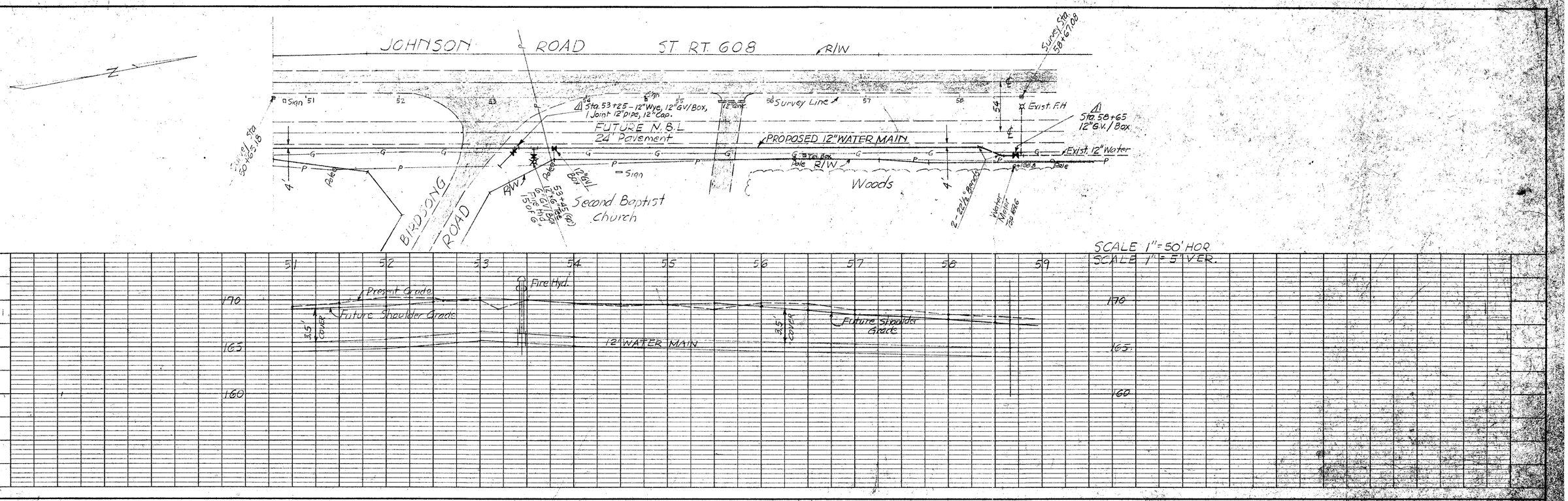

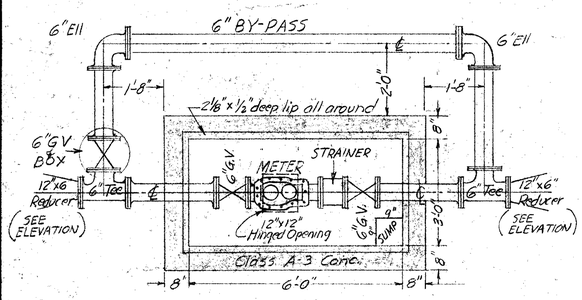

PLAN
1/2" = 1'-0"

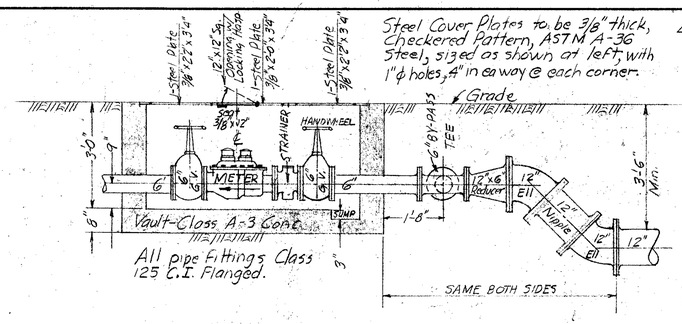

ELEVATION
1/2" = 1'-0"

METER-STRAINER-VAULT SPECIFICATIONS

1. Meter shall be (no or-equals) Neptune Tru/Flow Compound Meter, Size 6", and meet AWWA C-702, latest edition, Cold Water Meters - Compound Type. Specific construction details listed herein refer to Section Numbers of the Std C-702. Where these details are in conflict, then this Specification shall prevail.
2. Sect 4.2 - Capacity
   Meter shall be capable of measuring flows to 1,400 gpm., maximum continious flow of 1,000 gpm, with normal test flow limits from 3 to 1,000 gpm.
3. Sect 8.1 Registers will be Straight Reading Cubic Feet, with Center Sweephands, and low flow indicators. Registers will be hermetically sealed, and each measuring element will have a separate register.
4. Sect 10 - Intermediate gear trains shall be enclosed within the register box.
5. Sect. 11 - Measuring Chambers or Gages will be attached to main case cover and lift out with the removal of the cover.
6. Sect 14 - Automatic Valves shall be of the hydraulic valve design, straight through type.
7. Sect. 16 - Strainer - Separate Bronze Case Strainer, Stainless Steel plate type will be provided, 6" Size, to be Trident Turbine Strainer.
8. Sect 18.1 - Main Casing to be Copper alloy.
9. Sect. 18.2 - Register box rings/covers shall be made of Copper alloy.
10. Sect 18.5 - Disc Spindles may be made of synthetic polymer.
11. Sect. 19 - The registration at the "change-over" point shall not be less than 95%.

△ METER + VAULT
See location on Sheet 3/4

APPROVED FOR CONSTRUCTION
2 JAN. 06

CARL L. WATERS JR.
CIVIL ENGINEER
CERTIFICATE NO. 1285
CERTIFIED PROFESSIONAL ENGINEER
COMMONWEALTH OF VIRGINIA

BLAND RIDGE
WATER PLANS
26 June 1985 Scales: Noted
LaPrade Bros
Civil Engineers & Surveyors
Richmond, Va.
Revisions:
△ 27 Aug 85

SHEET 4 OF 4

PLAN
SURVEYED
PLOTTED
NOTE BOOK
ALIGNMENT CHECKED
RT. OF WAY CHECKED
NO.
BY
DATE

PROFILE
SURVEYED
PLOTTED
GRADES CHECKED
NOTE BOOK 1662
BRIDGE NO.
NO. 0.26
STRUCTURE NO. & TYPE
STRUCTURE NO. & TYS CH'KD
BY KWT/FLOW
SAK
DATE 6/85

PLATE 2 - PLAN - PROFILE O.P.R. & R.E. STANDARD
KEUFFEL & ESSER CO., NEW YORK.
K & E CO. NO. 345-2 MADE IN U.S.A.