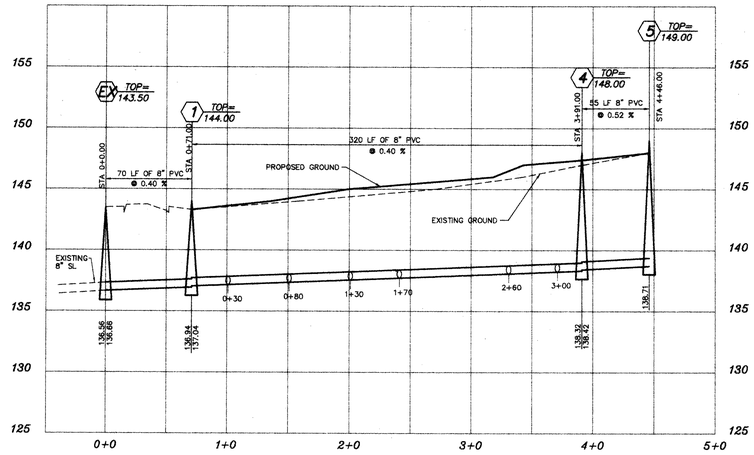

SANITARY SEWER PROFILE

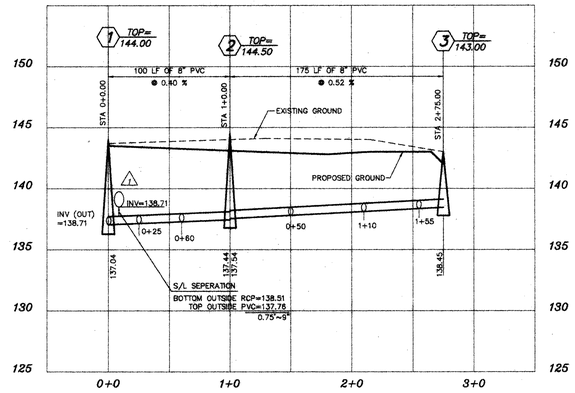

SANITARY SEWER PROFILE

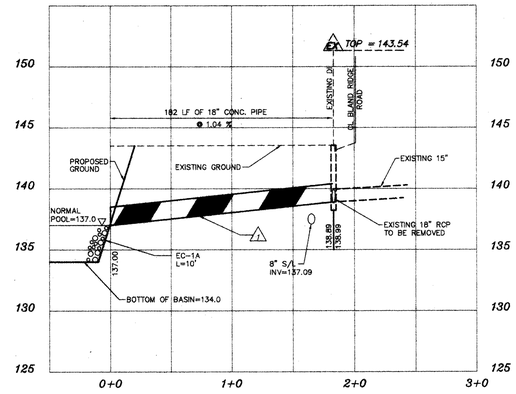

STORM SEWER PROFILE

KEY

EX. GROUND
PROP. GROUND

SCALE:
HORIZONTAL: 1"=50'
VERTICAL: 1"=5'

NOTE:
CONTRACTOR IS TO VERIFY LOCATION OF EXISTING UTILITIES, BOTH HORIZONTALLY & VERTICALLY, PRIOR TO THE BEGINNING OF CONSTRUCTION.

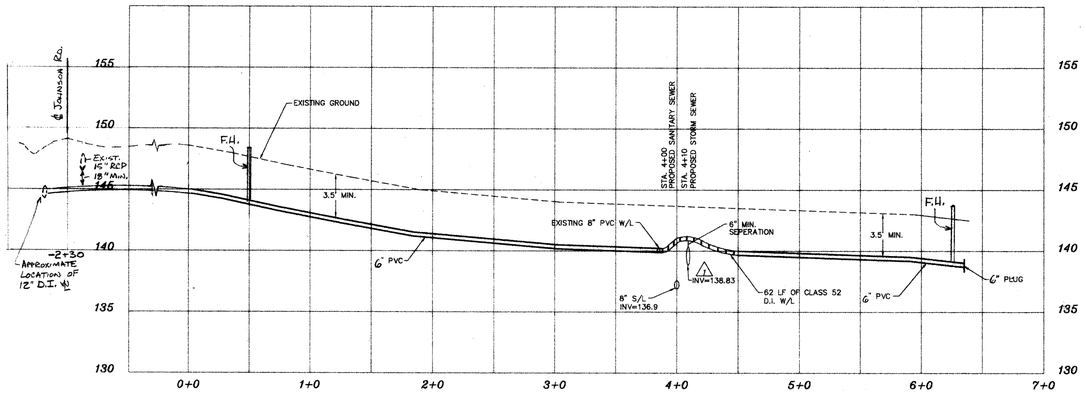

WATER LINE PROFILE

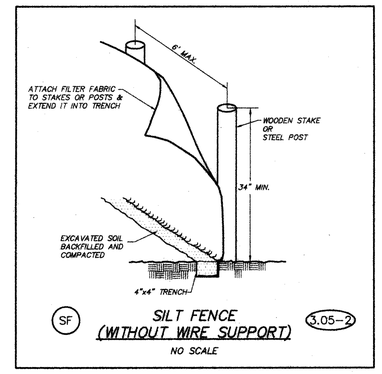

SF **SILT FENCE (WITHOUT WIRE SUPPORT)** 3.05-2

NO SCALE

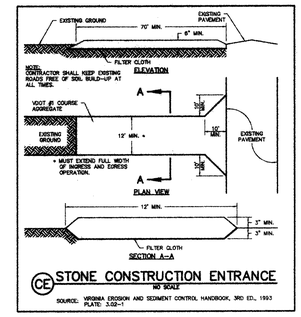

CE **STONE CONSTRUCTION ENTRANCE**
NO SCALE
SOURCE: VIRGINIA EROSION AND SEDIMENT CONTROL HANDBOOK, 3RD ED., 1993 PLATE 3.02-1

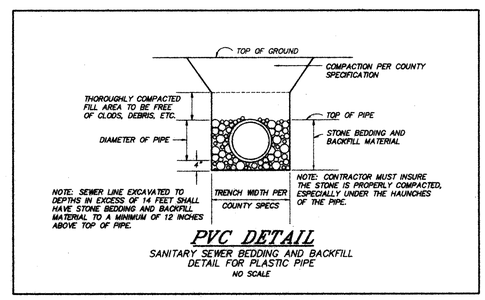

PVC DETAIL
SANITARY SEWER BEDDING AND BACKFILL DETAIL FOR PLASTIC PIPE
NO SCALE

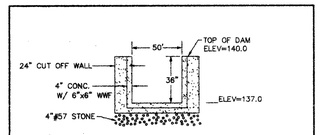

OUTLET STRUCTURE
SECTION A-A
NTS

EROSION CONTROL NARRATIVE:

1. NOTIFY THE INSPECTOR WITH JAMES RIVER SOIL AND WATER CONSERVATION DISTRICT AT 748-2235 OR 733-2788 FOR A PRECONSTRUCTION MEETING AND ON-SITE VISIT ONE WEEK PRIOR TO BEGINNING CONSTRUCTION.
2. INSTALL CONSTRUCTION ENTRANCE AND SILT BASIN AS PER PLAN.
3. CLEAR AND GRUB SITE.
4. INSTALL BASIN AND OUTLET STRUCTURE AS PER PLAN.
5. INSTALL STORM SEWER AS SHOWN.
6. INSTALL UTILITIES AS PER PLAN.
7. FINE GRADE SITE.
8. START BUILDING CONSTRUCTION.
9. SEED DENUDED AREAS AS SOON AS POSSIBLE AND MULCH ALL DISTURBED AREAS.
10. CONTINUING MAINTENANCE PRACTICES SHALL BE PERFORMED TO INSURE PROTECTION OF DOWNSTREAM PROPERTIES.
11. NO EROSION CONTROL DEVICE SHALL BE REMOVED UNTIL AN ADEQUATE STAND OF GRASS HAS BEEN OBTAINED.

NOTES:
ALL EROSION AND SEDIMENT CONTROL MEASURES SHOWN ON THE PLAN ARE TO BE CONSTRUCTED, MAINTAINED, AND REMOVED IN ACCORDANCE WITH THE CURRENT EDITION OF THE " VIRGINIA EROSION AND SEDIMENT CONTROL HANDBOOK".

SEED AND MULCH DISTURBED AREAS AS PER THE CURRENT EDITION OF THE " VIRGINIA EROSION AND SEDIMENT CONTROL HANDBOOK".

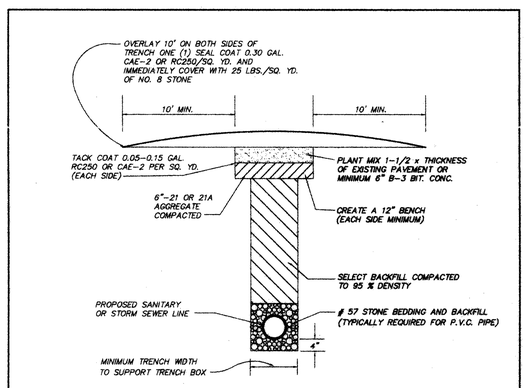

TYPICAL SECTION FOR REPAIR OF OPEN CUT AFTER REPLACEMENT OF SANITARY AND STORM SEWER

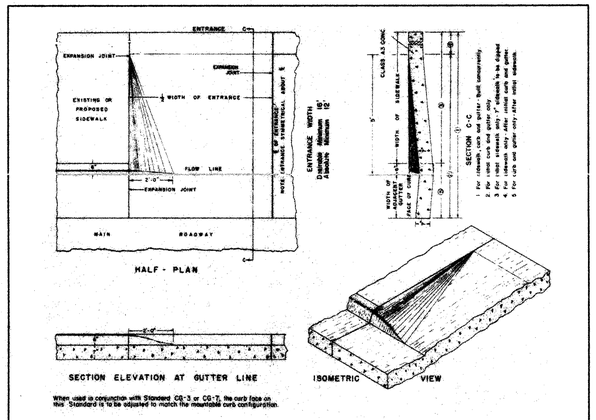

When used in conjunction with Standard CG-3 or CG-7, the curb face on this Standard is to be adjusted to match the mountable curb configuration.

STANDARD DRIVEWAY DETAIL

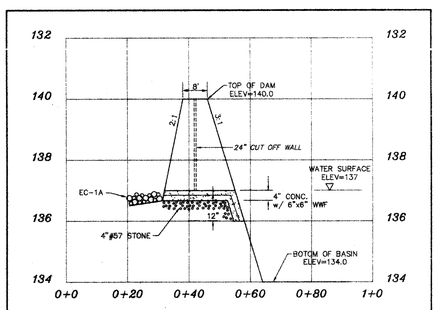

OUTLET STRUCTURE
SECTION B-B

SCALE
VERTICAL: 1" = 2'
HORIZONTAL: 1" = 20'

15845PRO.DWG
PLOT50

8803 STAPLES MILL ROAD
RICHMOND, VIRGINIA 23228
TELEPHONE: (804) 262-7398

711 NORTH COURTHOUSE ROAD
RICHMOND, VIRGINIA 23236
TELEPHONE: (804) 794-3500

4411 CROSSINGS BOULEVARD
PRINCE GEORGE, VIRGINIA 23875
TELEPHONE: (804) 458-8685

ENGINEERS * ARCHITECTS * SURVEYORS * PLANNERS * LANDSCAPE ARCHITECTS

COMMONWEALTH OF VIRGINIA
EDWARD L. GLASS
No. 17584
8-30-94
PROFESSIONAL ENGINEER

DATE	REVISION DESCRIPTION
8-29-94	COUNTY ENGINEERING REVISIONS
9-27-94	EXTEND ⓢ TO JOHNSON RD., ADD F.H.

DATE 8-1-94
DRAWN BY J.E.A.
DESIGNED BY D.A.J.
CHECKED BY E.L.G.
SCALE 1" = 30'

BLAND RIDGE CONDOMINIUMS

PROFILES & DETAILS

SHEET NO. 3 OF 3
JOB NO. 15845-05