LEGEND – WIRING DIAGRAM

S	SWITCH, POLES AS INDICATED
PS	SWITCH, CLOSE ON DECREASING PRESSURE
FS	SWITCH, CLOSE ON DECREASING LIQUID LEVEL
FS	SWITCH, CLOSE ON INCREASING LIQUID LEVEL
TD	SWITCH, CLOSE ON TIME DELAY
M	COIL, MOTER STARTER
R	COIL, RELAY AS NOTED
	CONTACTS, NORMALLY OPEN
	CONTACTS, NORMALLY CLOSED
OL	MAGNETIC OVERLOAD DEVICE
	FUSE, SIZE AS NOTED
	SWITCH, DISCONNECT
	CIRCUIT BREAKER, SIZE AS NOTED
	RESISTIVE HEATER

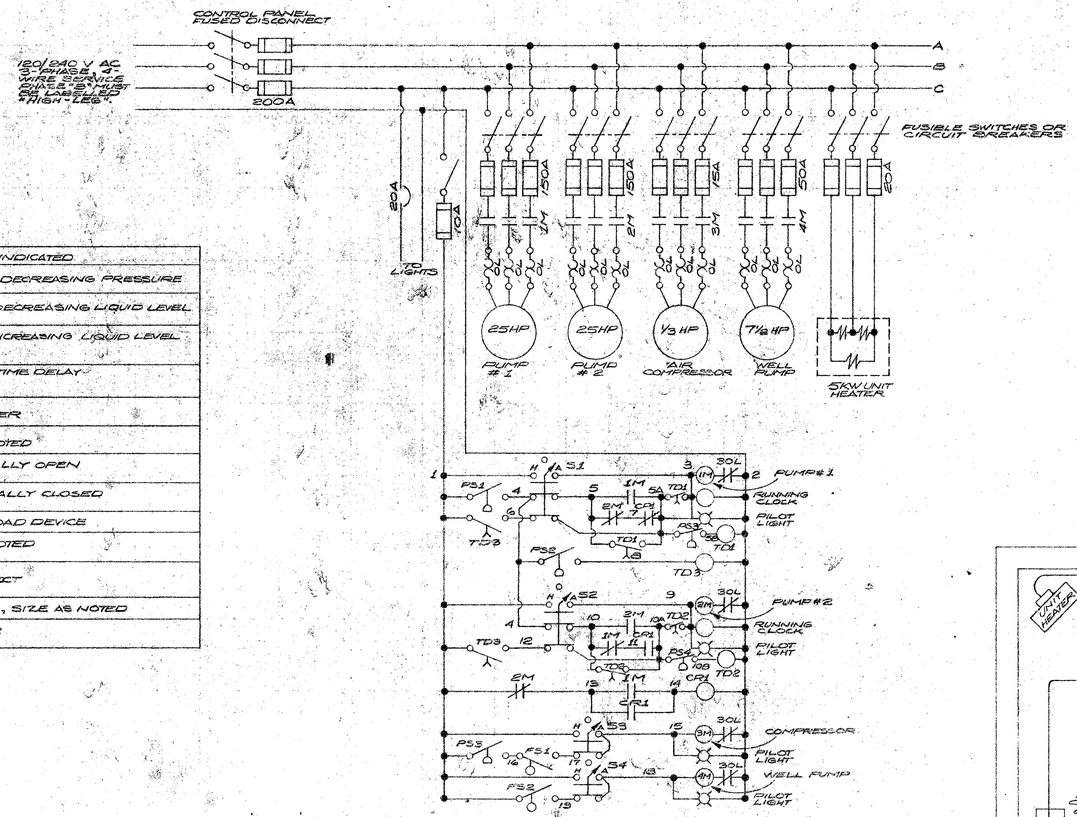

WIRING DIAGRAM
NO SCALE

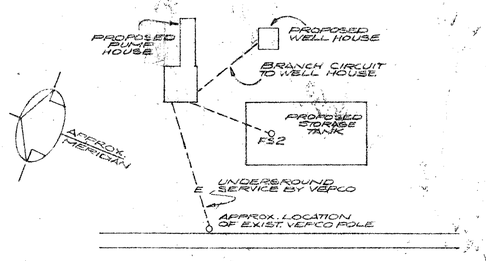

SITE PLAN
SCALE: 1"=30'

LEGEND – ELECTRICAL PLAN

	LIGHTING FIXTURE, INCANDESCENT
	DUPLEX RECEPTACLE, MH = 2'-0"
S	TOGGLE SWITCH, MH = 4'-6"
F	DISCONNECT SWITCH, F DENOTES FUSIBLE, MH = 5'-0" TO TOP
1	MOTOR ON EQUIPMENT; NUMBER DENOTES HP
——	CONDUCTORS IN CONDUIT
	CONDUCTORS IN FLEXIBLE CONDUIT
- - -	CONDUCTORS IN CONDUIT BELOW GRADE

LIGHTING FIXTURE SCHEDULE

A. INCANDESCENT LAMPHOLDER, 100 WATT, 120 VOLT WITH WIRE GUARD, BRYANT CAT. Nº 5228
B. INCANDESCENT VANDAL-PROOF, 100 WATT, 120 VOLT KENALL CAT. Nº 3663

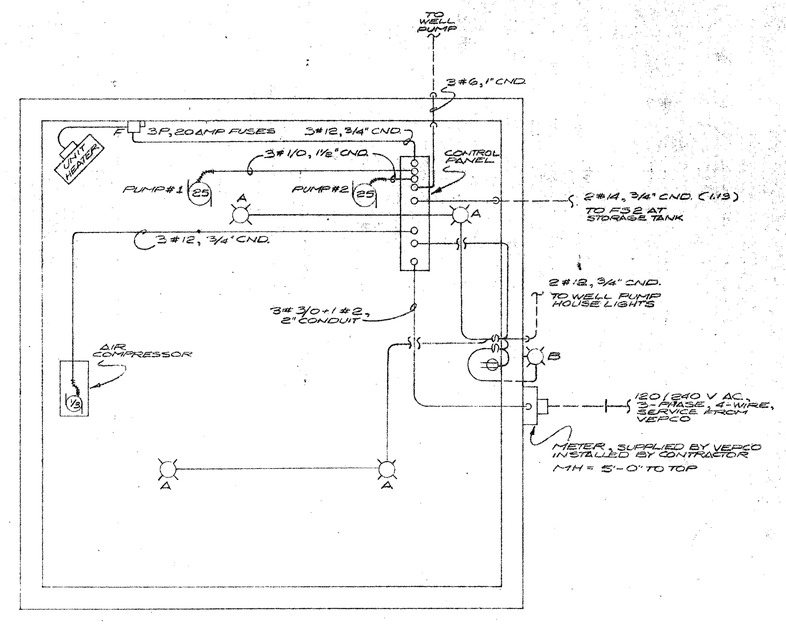

ELECTRICAL PLAN
SCALE: 1/2"=1'-0"

DRAPER – ADEN ASSOCIATES, INC. ENGINEERS · SURVEYORS · PLANNERS BLACKSBURG, VIRGINIA	DESIGNED DR DRAWN DSH CHECKED WAA DATE 1·23·1976	BEECHWOOD MANOR PUMPING STATION	REVISIONS: REVISION DATE: 2/6/76 REVISION DATE: 6/5/76	SCALE: AS SHOWN PLAN Nº T74-366A	SHEET 1 OF 1

SOUTHERN PHOTO PRINT OF VIRGINIA